VIII Project Fabrication

1. PCB Assembly

Final Assembly Directions

These directions should be followed once the board is etched and the chassis metalwork completed.
☑ each step off as you go.

You will need the following drawings to complete the fabrication of this project:

6622-4200 sheets 1 through 4 from "Metal Fab". (See the last 4 sheets of this section.)

CIE14-2901, 5801, and 6801 made from the PCB artwork & schematic files. They are printed below.

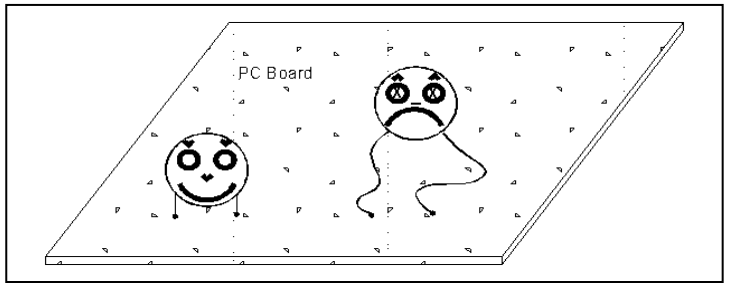

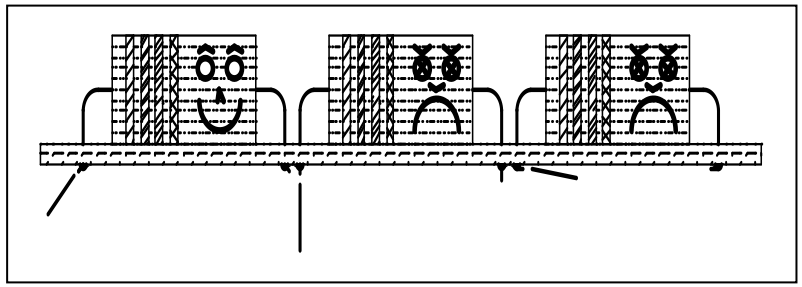

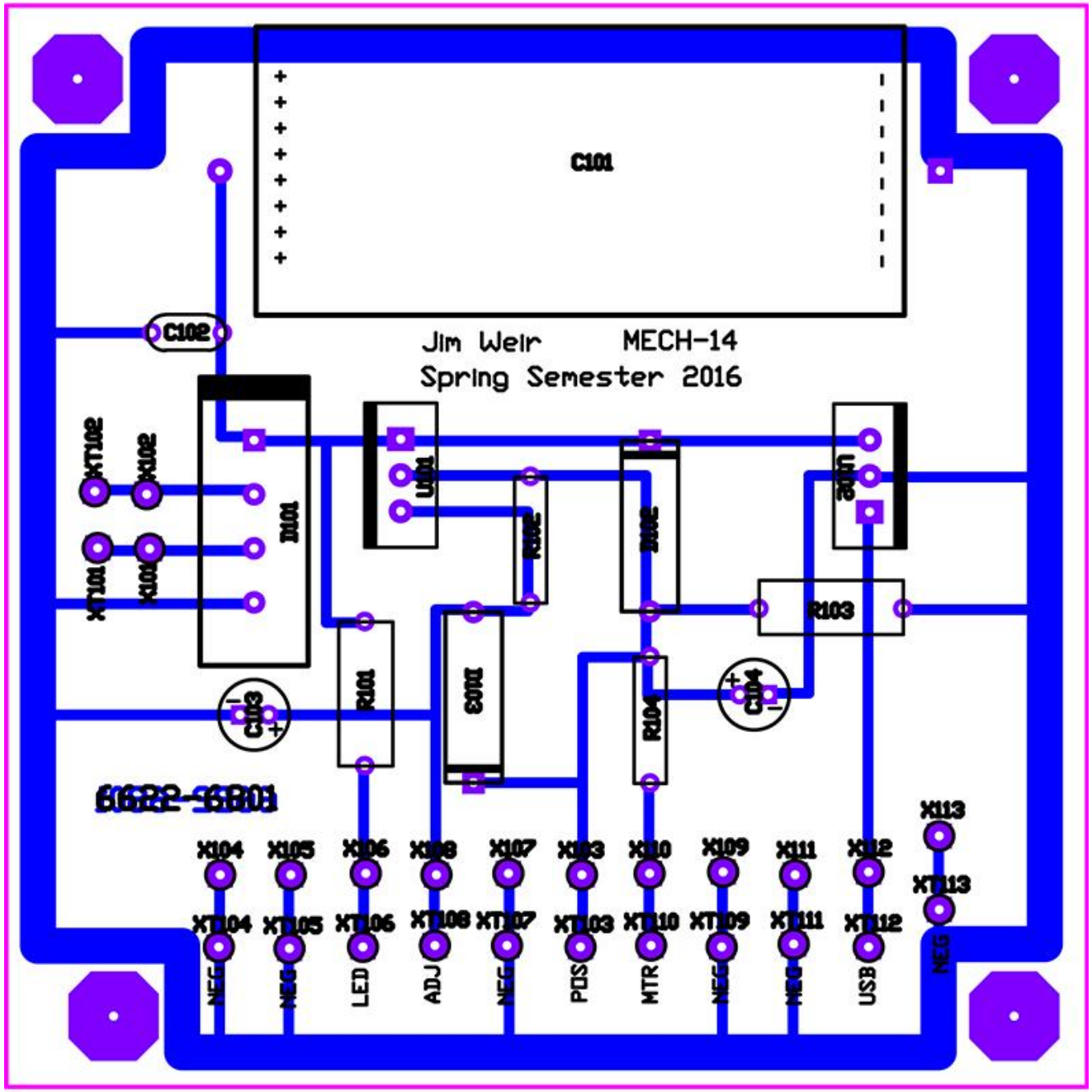
C101
C102
Jim Weir MECH-14
Spring Semester 2016
XT102
X102
XT101
X101
D101
U101
R102
D102
U102
R103
R101
D103
R104
C103
C104
X113
XT113
X104
X105
X106
X108
X107
X103
X110
X109
X111
X112
XT104
XT105
XT106
XT108
XT107
XT103
XT110
XT109
XT111
XT112
NEG
NEG
LED
ADJ
NEG
POS
MTR
NEG
NEG
USB
NEG

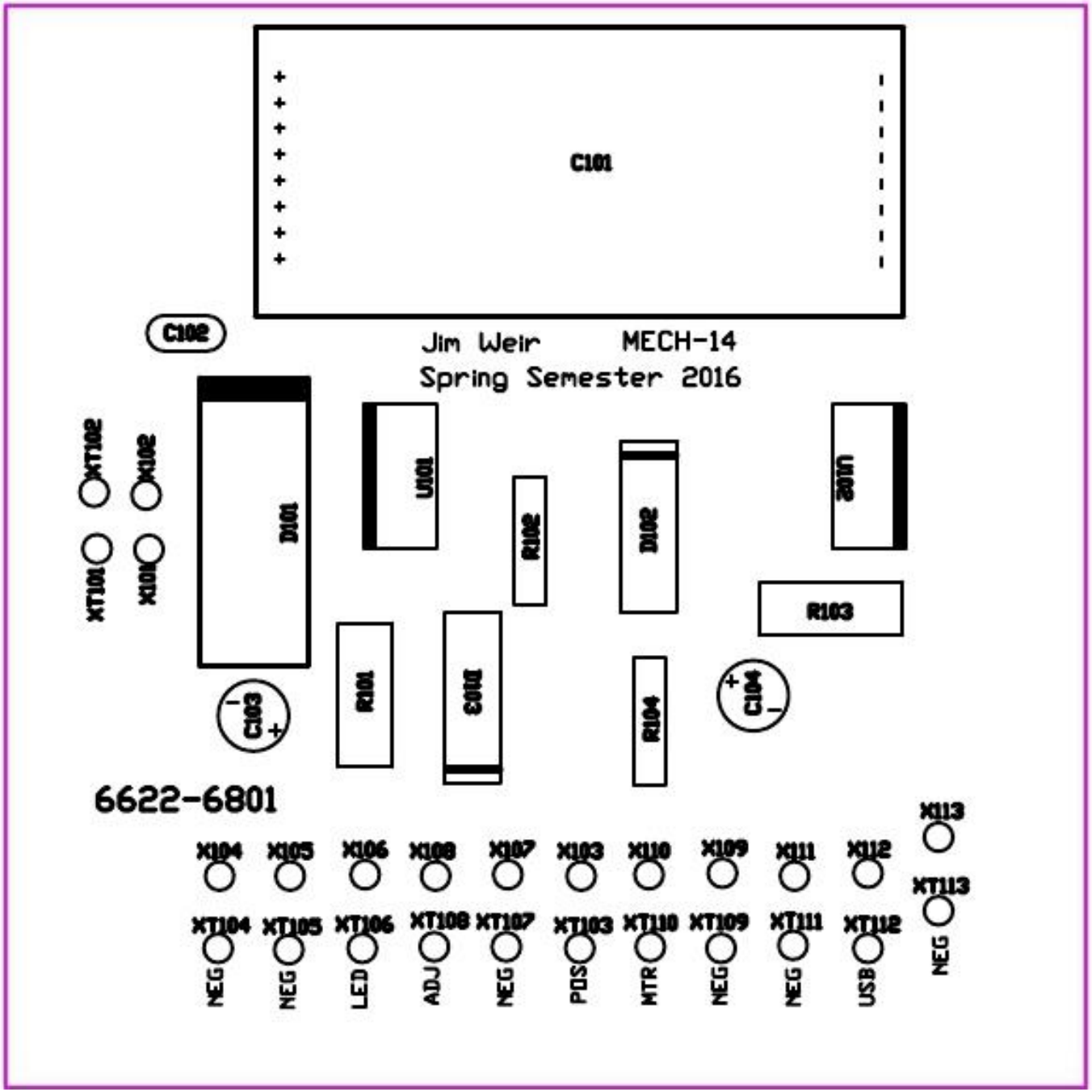
C101
C102
Jim Weir MECH-14
Spring Semester 2016
XT102
X102
XT101
X101
D101
U101
R102
D102
U102
R103
R101
C103
R104
C104
6622-6801
X113
X104 X105 X106 X108 X107 X103 X110 X109 X111 X112
XT113
XT104 XT105 XT106 XT108 XT107 XT103 XT110 XT109 XT111 XT112
NEG NEG LED ADJ NEG POS MTR NEG NEG USB NEG

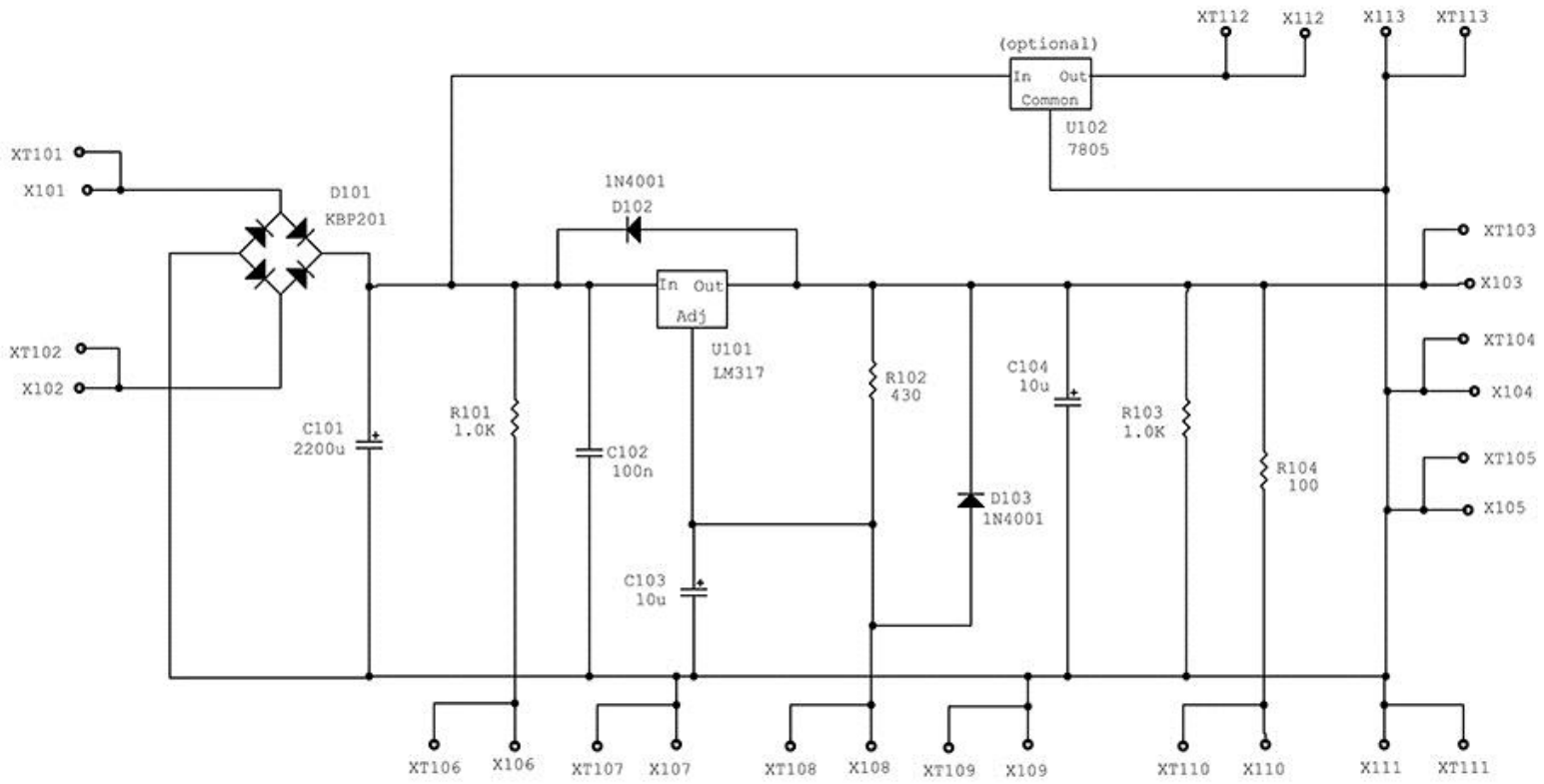

Reference	Type	Major Class	Minor Class	Value
D101	Bridge Rectifier	Transistors & Diodes	Diode	fwbridge - KBP201
D102, 103	Rectifier	Transistors & Diodes	Diode	Rectifir - 1N4001
C101	Cap Electrolytic	Capacitors	Polar	Elecaxi - 2200u 50v
C102	Cap Disk Ceramic	Capacitors	Ceramic	Gpdisk - 100n
C103, 104	Cap Electrolytic	Capacitors	Polar	Elecrad - 10u
R101, 103	Res Carbon Film	Resistors	Fixed Film	1watt - 1.0K
R102	Res Carbon Film	Resistors	Fixed Film	Qwatt - 430
R104	Res Carbon Film	Resistors	Fixed Film	Qwatt - 100
U101	Integrated Circuit	Linear Active	Voltage Regulator	vregadj - LM317
U102 (optional)	Integrated Circuit	Linear Active	Voltage Regulator	78XXX - 7805
X101-X113	Wire Hole	Connectors	Active	In-Out
XT101-XT113	Test Wire Hole	Connectors	Active	In-Out-Test

Power Supply PC Board	
Rev B	ID 6622-5801
Date: 06 Feb '16	Page: 1 of 1

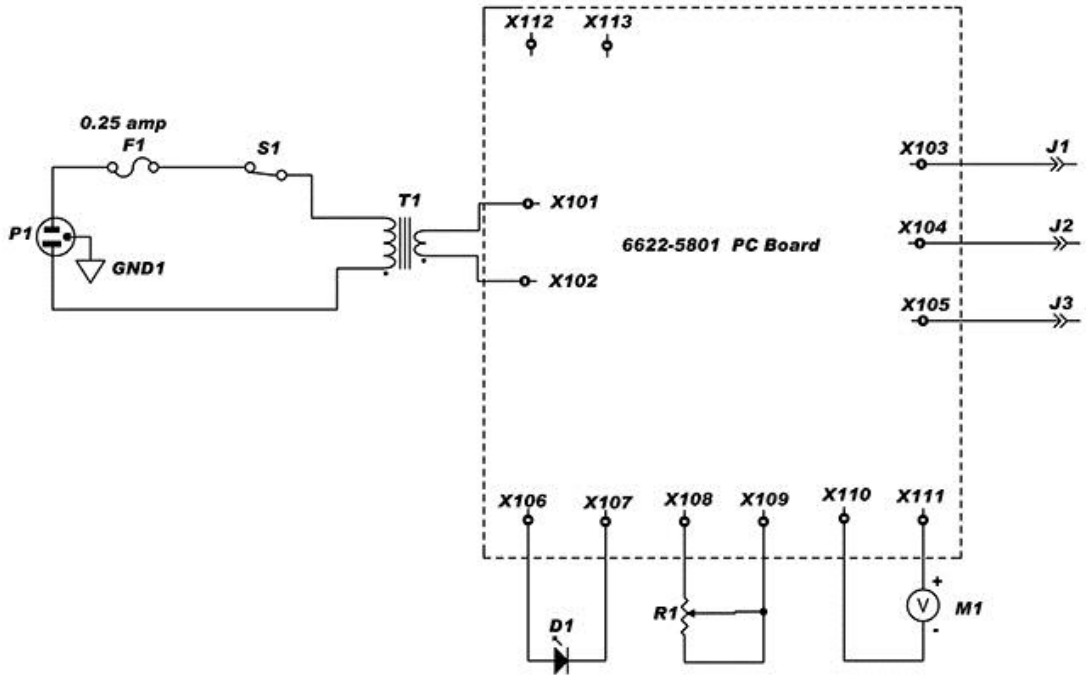

Reference	Type	Major Class	Minor Class	Value
D1	LED	Transistors & Diode	Diode	Lighted - Red
F1	Fuse	Power Supplies	Linear	Fuse
J1, 2, 3	Jack	Connectors	Connector	-
M1	Meter	Power Supplies	Linear	V Source
P1	Plug	Connectors	Misc	AC Plug
R1	Potentiometer	Resistors	Panel Mount	panlpot - 5k
S1	Switch	Switches	Toggle	1pST
X101-113	Connectors	Active	In&Out	-

Power Supply Chassis Schematic	
Rev B	ID 6622-2901
Date: 06 Feb '16	Page: 1 of 1

1. ☐ Place the bridge rectifier D101and large electrolytic capacitor C101 into their respective mounting holes on the board. Please note that the mitered (+ or positive) end of D101goes to the (top) dark bar on one end of the legend and that the electrolytic capacitor has a positive and negative end. Press both parts down until they are flat on the board and then splay the leads out at a 45° angle. (If you are unsure of how to identify these parts, consult the instructor or lab tech). Solder the parts to the board and clip off the excess wire length. Save these wire clippings for the next step.

2. ☐ Take one of the wire clip-offs from the last step. Insert it into hole XT101 so that it extends out the top of the board about an inch. Solder it and clip off the excess wire. (XT101 on this layout is just to the left of the bridge rectifier.) Similarly, solder a wire clip-off into hole XT102.

3. ☐ Take the partially assembled board to the test fixture and place it over the mounting screws so that it is solidly in place and cannot short out to the chassis bottom. Have the instructor or lab tech show you how to hook up the transformer red leads to XT101 and XT102. Have the instructor plug the test fixture into the wall and turn the power switch on. Take a digital voltmeter and hook it to the (+) and (-) leads on the electrolytic capacitor. It should read plus 17 volts or thereabouts. If it does not, have the instructor show you how to troubleshoot your soldering.

4. ☐ Install the following parts:

   a. 10 µf electrolytic capacitors (polarized!) at C103 and C104.

   b. 100n disk ceramic capacitor at C102.

   c. 1N400x diodes (polarized!) at D102 and D103 ("x" means any numeral is OK here).

   d. 430 ohm resistor (yellow-orange-brown-gold) at R102.

   e. 680 ohm ½ watt resistor (blue-gray-brown-gold) at R101

   f. 1.0K ohm ½ watt resistor (brown-black-red-gold at R103.

   g. 100 ohm (brown-black-brown-gold) at R104.

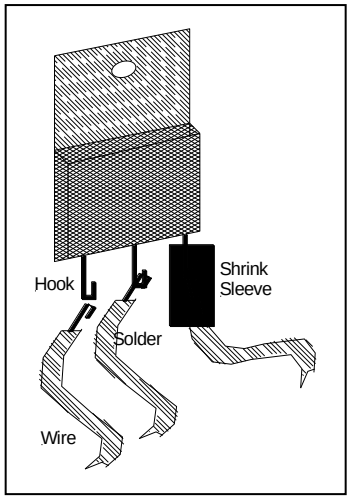

5. ☐ Clip the 3 leads coming out of the LM-317 voltage regulator IC so that about ½" of lead remains on the IC. Bend each lead into a U-hook with the bend going towards the FRONT of the IC. (The back of the IC is completely flat; the front has a bulge containing the IC.) Obtain a 12" long red wire stripped from the multiconductor ribbon cable, a 12" long orange wire, and a 12" long green wire. Strip ½" of the insulation on one end of each wire and tin (i.e. coat with a thin coating of solder). Bend each of the

tinned wire ends into a hook. Looking at the front of the IC (letters and numbers printed side), hook the red wire into the ***right***most pin-hook of the IC, squeeze both hooks together, then solder the IC lead to the wire. When you are done, the wire should be coming straight out of the bottom of the IC. Similarly, connect the orange wire to the center lead of the IC and the green wire to the left lead of the IC. Slip a small piece of shrink sleeving over each one of these connections and shrink-insulate the wires and leads of the IC.

6. ☐ Place the PC board into your chassis at the approximate point where it will eventually reside. Hold the IC to the inside back of the chassis over the small 0.120" diameter hole drilled for it.

NOTE: This image is of a prior design. Your board will not exactly match this board in size or layout.

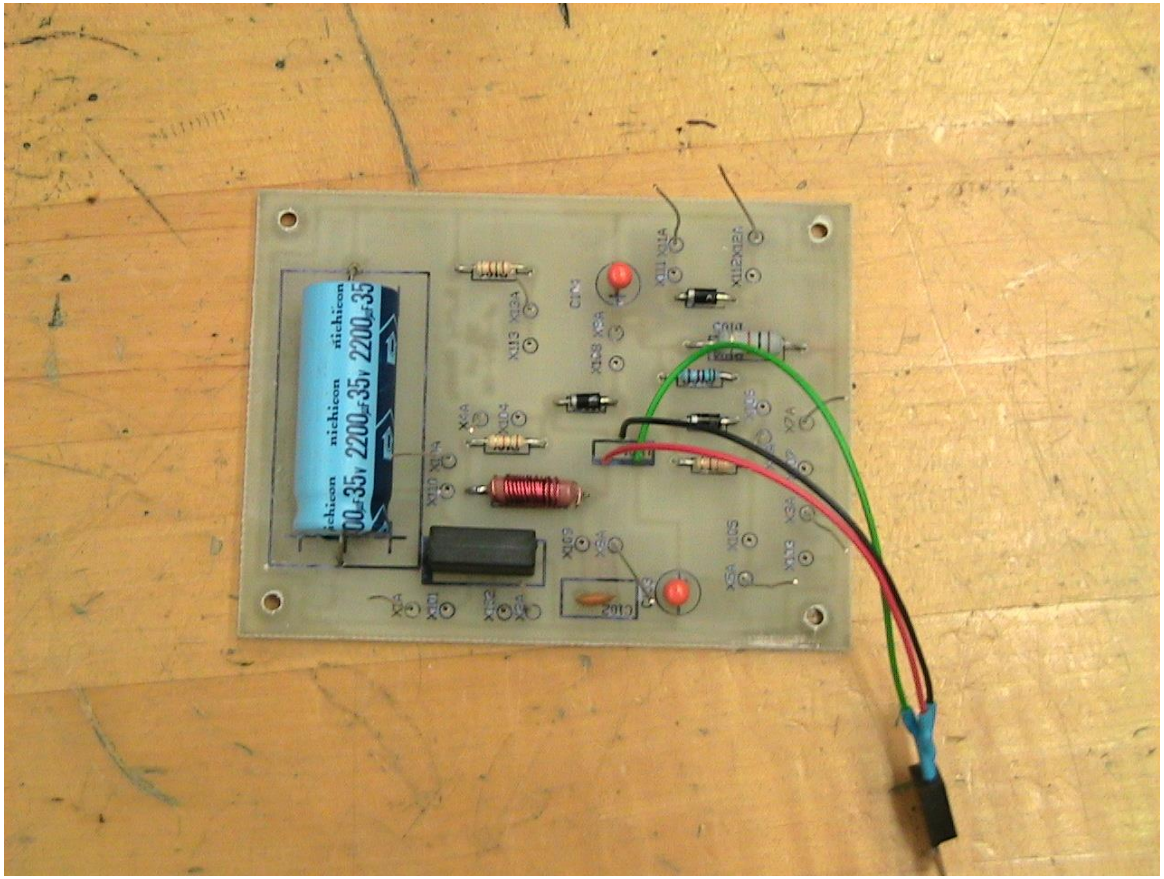

7. Take all three leads together and run them onto the board where they are going to connect into U101. Give yourself at least and inch but no more than two inches of excess wire and clip the wires down where they are going to attach to the board. Strip the free end of each wire about a quarter of an inch. Place the wires one by one into their corresponding hole (note the heavy bar on the legend indicating the back or metal tab side of the IC), red to top or right, orange to center and green to bottom or left. Solder each wire as you install it and inspect **carefully** to make sure no little wire whiskers are shorting out between the wire holes.

8. ☐ As you did with XT101 and XT102, solder a 1" test wire (clipped component wire) into all remaining test (XT???) holes. Return your board to the instructor and have the instructor show you how to test the completed board in the test fixture.

9. ☐ When the board tests "good" on all functions, wire up the board as follows (make all wires 12" long; for "small" use the colors that you have stripped from the multicolored ribbon cable. Solder each wire as you go):

    a. X101, (later step)
    b. X102, (later step
    c. X103, #22 red wire
    d. X104, #22 black wire
    e. X105, (optional) #22 black wire
    f. X106, small brown wire
    g. X107, small black wire
    h. X108, small yellow wire
    i. X109, small black wire
    j. X110, small blue wire
    k. X111, small black wire
    l. X112, (optional #22 red wire

2. Chassis & Final Wiring

1. ☐ Please study the drawings pages 15-18 before beginning this section.

2. ☐ Place the PC board to one side of your workspace. Using #6 hardware (screw, lockwasher, nut) bolt the transformer to its spot on the chassis. Install a ground lug under the lockwasher and nut on the transformer's rear mounting hardware (point the ground lug out the side of the chassis closest to the transformer. Install the transformer so that the RED leads exit the transformer nearest where the PC board is going to go

3. . ☐ Reading left to right looking at the faceplate, install the on-off switch S1. Use an ohmmeter and install S1 so that the switch is "closed" (on) with the toggle towards the TOP of the chassis.

4. Install the potentiometer R1 (lugs facing up), the three banana jacks (J3 - green on top, J2 - black to the right, and J1 - red to the left), the meter M1 on the front of the chassis, and the red lens and red LED at D1.

5. ☐ Install the fuse holder in the top hole on the rear of the chassis. Install a ¼ amp slo-blo fuse into the fuseholder.

6. ☐ Strip the line cord back 5" so that the black, white, and green wires are exposed. Cut off any string or packing material. (Note -- if the line cord is not color-coded black, white, and green, have the lab tech identify the line hot, neutral, and ground for you.) Using the special Heyco pliers, install the Heyco bushing and line cord onto the chassis remaining large hole. Be sure that the bushing grips the outer black plastic insulation of the line cord when it is seated in the mounting hole.

7. Cut 4 pieces of ¼" diameter shrink sleeving ½" long.

8. ☐ Strip the black line cord wire ½". Twist the small stranded wires of the black wire together tightly and tin. Slip a ½" long piece of ¼" shrink sleeving over the black wire. Insert the black wire into the bottom lug on the fuse holder, bend the wire into a hook, and solder the wire to the fuse holder lug. Shrink the sleeving so that absolutely NO metal shows on the connection. (Note: from this point forward "connect" means to twist the strands of the wire tight, tin the wire, insert the wire into the appropriate lug, bend into a hook, crimp shut, and solder. Where shrink sleeving is called for, shrink after soldering so that NO metal shows on the connection.). Note – if you can find a large diameter shrink sleeving, you may find it easier to shrink the sleeving over the whole fuse holder.

9. ☐ Cut a piece of relatively heavy (#20-22) black stranded wire to fit from the fuse holder, down the chassis, up the chassis, and to the switch. Strip each end of the black wire ½", twist, and tin. Slip two ½" long ¼" pieces of shrink sleeving over the wire. Connect one

end of this black wire to the remaining lug on the fuse holder. Connect the other end of the wire to either of the lugs on the switch, slide the shrink sleeving over this connection and shrink so that no metal is visible.

10. ☐ Cut one of the black transformer leads so that it goes along the chassis bottom, up the chassis front, and to the remaining lug on the switch. Strip the transformer lead ½" and slip a ½" long ¼"shrink sleeving onto the lead. Connect the black transformer lead to the remaining switch lug. Shrink sleeve the connection as in step 8 above.

11. ☐ Cut the remaining black transformer lead and the white line cord lead so that they will "hook" together (similar to how you connected wires to the integrated circuit) and not apply any tension to the wires when they are joined. Strip both leads ½", twist, and tin. Slip **two** ¾" pieces of shrink sleeving over one of the wires. Bend both wires into a hook, join together, and crimp tight. Solder. Slip one of the pieces of shrink sleeving over the connection and shrink the sleeving. Slip the other piece of shrink sleeving over the same connection and shrink again.

12. ☐ Cut a piece of small (#22-24) green wire 12" long. Cut both this green wire and the green wire coming from the line cord so that they will connect to the ground lug on the rear of the transformer. Connect one end of the green wire and the green wire coming from the line cord to the ground lug (it may be easier to remove the ground lug, solder the wires, then reinstall the ground lug). Solder the free end of the green wire to green banana jack J3.

13. ☐ Place the PC board in its approximate final location on the chassis. Cut the two transformer red leads so that they will easily go into holes X101 and X102. Connect the red leads (it does not matter which one is which), one lead to each of these two holes.

14. ☐ Using 4-40 x ¾" screws, ½" plastic spacers, lockwashers, and nuts, mount the PC board to its spot on the chassis with finger-tight on the mounting nuts. Note that one rubber "foot" will be used on the chassis edge side of the hardware. If you find the #4 hardware pulling through the foot, use a flatwasher between the screw head and the foot.

15. ☐ Install two rubber feet on the side of the chassis closest to the transformer using #4 machine screws, lockwashers, and nut. Install the remaining foot in the remaining hole by the pc board.

16. ☐ Install the following wires to/from the pc board:

    a. X101 Red transformer wire from a previous step.
    b. X102 Red transformer wire from a previous step.

    c. X103 #22 red wire to J1 (red banana jack)

    d. X104 #22 black wire to J2 (black banana jack).

    e. X105 (optional) black wire to the negative terminal of the USB connector.

f. X106 brown wire to the ANODE of LED D1. Note that the CATHODE of D1 has a very tiny flat on the bottom ("skirt") of the red diode package.
g. X107 black wire to the CATHODE of LED D1.
h. X108 yellow wire to R1 pin 3.
i. X109 black wire to R1 pin 1. Before soldering connect a short bare wire from R1 pin 1 to R1 pin 2, then solder both pins 1 and 2.
j. X110 blue wire to meter M1 positive (+) terminal
k. X111 black wire to meter M1 negative (-) terminal
l. (optional) #20 red wire to the positive terminal of the USB connector

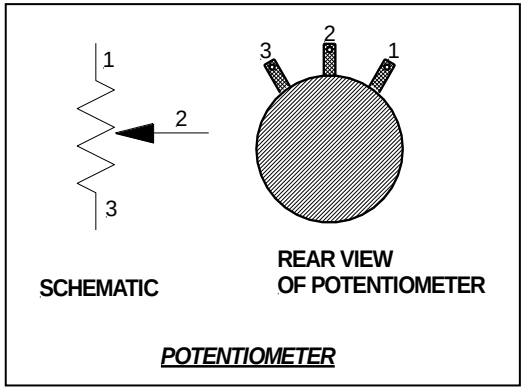

17. ☐ (See the drawing page 16) Bolt the integrated circuit U101 to the rear of the chassis. There needs to be white thermal compound ("goose grease") between the case of the integrated circuit and the chassis. Use a TINY bit of grease, and don't get it on your hands or your clothes. It isn't particularly poisonous, but it is very difficult to remove.

    If your integrated circuit has a metal tab for fastening, then you will have to insulate it from the chassis with a mica washer and a shoulder washer. The order of assembly is:

    The small machine screw FROM the back of the chassis THROUGH to the inside
    The mica washer with a THIN coating of thermal grease on both sides
    The integrated circuit U101
    The small shoulder washer over the screw and into the hole on U101
    The lockwasher
    The nut. Install with medium tension on the nut (not TOO tight).

    These insulation kits are available from the lab techs. After you have installed the IC, take an ohmmeter and test to see whether there is continuity from the metal tab to the chassis. There should be an infinite reading on the ohmmeter if you have installed the hardware properly.

18. ☐ Assemble the red test lead with a red banana plug on one end of the red wire and an alligator clip and red insulator on the other end of the red wire. Similarly, construct a black test lead.

This completes the assembly of the power supply.

Testing

1. Plug the AC line cord into an AC outlet.

2. Rotate the voltage control R1 maximum counterclockwise.

3. Press the on-off switch S1 once. The red LED D1 should light and the meter should show a little over a volt and a half. Rotate R1 and the voltage should smoothly go from the bottom of the meter scale to nearly 15 volts.

4. Rotate R1 so that the meter reads 11 volts. Connect a 22 ohm 10 watt (or greater) resistor from the black to the red banana jacks (J2 to J1). The meter should drop less than a tenth of a volt. (Note - you can also use a test box with dummy loads (light bulbs) if your instructor has constructed one. The standard load test box has a toggle switch for half ampere and one ampere at 11 volt loads.)

END OF TEST

3. How It Works

a. Download (or copy) the Chassis Wiring Diagram (MECH14-2904). These parts work as follows:

   i. P1 plugs into the wall to provide 110 volt power to the unit
   ii. F1 protects the wiring and the rest of the circuits from overload
   iii. S1 turns the unit on and off
   iv. R1 selects the output voltage
   v. D1 is an indicator that the unit is powered on.
   vi. J1 & J2 are the output jacks for the power supply
   vii. T1 is a transformer that takes the 110 volt wall voltage down to 12.6 volts to power the supply.
   viii. The various "X" points on the board are where these parts connect via wire holes to the board itself

b. Download (or copy) the schematic of pc board MECH14-5801. These parts work as follows:

   i. The power supply transformer comes in to the board on pins X101 and X102. While we say that this is a "12.6 volt" transformer, in fact the peak voltage of any "RMS" rated transformer is 1.4 times the RMS voltage. Therefore, the peak voltage that this transformer delivers is 17.6 volts.
   ii. This voltage is applied to bridge rectifier D101. D101takes both halves of the AC waveform presented to it and outputs it as a DC voltage. This DC voltage will be the peak AC voltage less one silicon diode drop, or 17.6 volts less 0.6 volts, or about 17 volts DC at the output (right side) of D101.
   iii. C101 smooths the ripple AC remaining on the 17 volt supply so that there is nearly pure DC at the input of U101.
   iv. Most high-gain voltage regulators (U101) will have a particularly nasty tendency to oscillate (make internal noise) unless there is a small capacitor right at the input to the regulator. C102 does this job.
   v. R101 is a current limiting resistor for the LED that we are using to indicate power on.
   vi. U101 takes the input voltage from D101 and outputs a voltage determined by R104 and the external potentiometer we discussed above, R1.
   vii. C103 strips any noise from the wires that we use to connect R1 to U101
   viii. D102 and D103 are called "reverse voltage protection" diodes. If a voltage in excess of the voltage produced by U101 were to be connected to X103/X104, then U101 would be instantly destroyed. These diodes would shunt that voltage around and protect U101. Good example: The power supply is set for 6 volts output and then connected to a 12 volt car battery. Poof goes U101 without these protection diodes.
   ix. C104 is an output spike capacitor. If a sudden load is applied to the output terminals (X103-X104) U101 takes a given amount of time (microseconds) to respond. C103 keeps the voltage from collapsing while U101 has a chance to respond.
   x. R103 is a minimum load resistor. U101 does not like to work with zero output current. This resistor is simply a milliampere-per-volt load on the output.

xi. R104 is a "keep it from blowing up" resistor should a fault occur in the metering circuit. It makes not a bit of difference in the voltage reading, but will keep U101 from overheating if there is a short in the metering circuit.

4. Optional USB Power Supply

1. If a U102 (7805) voltage regulator is installed, +5 volts for a USB charger is available at X112. This is left as an exercise for the student to construct.
.

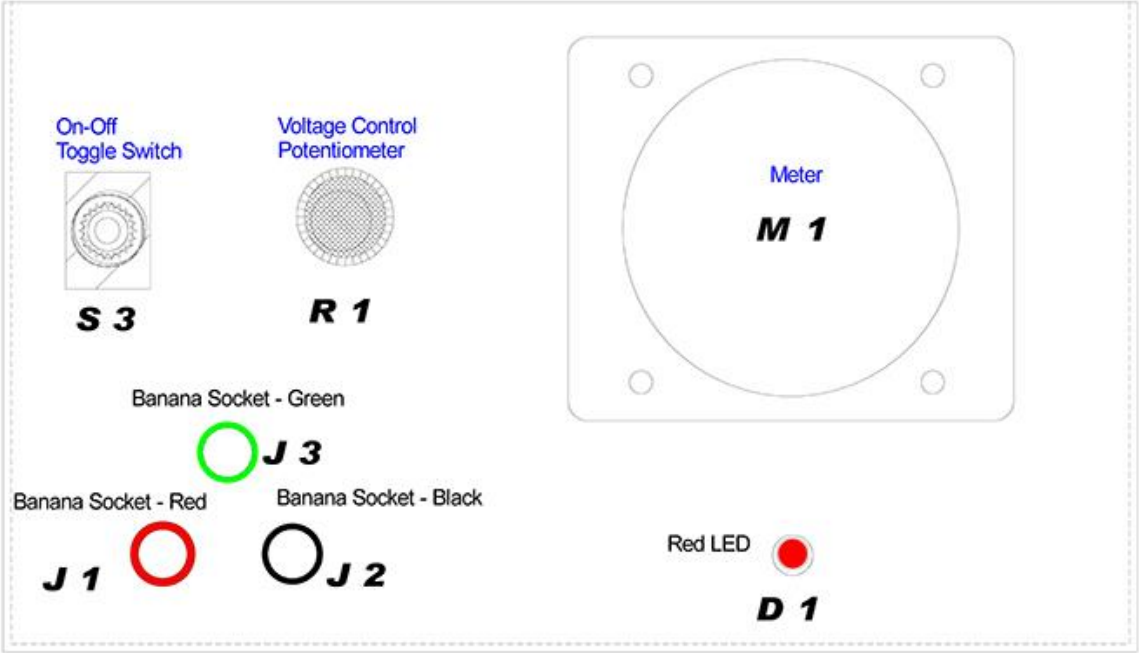

Assembly Drawing

Power Supply Main Chassis	Scale: 1:1 Date: 28 Apr '16	Drawn by: OWJ Rev: F	Approved by: Jim Weir	RST Engineering 13249 Grass Valley Ave Grass Valley CA 95945 530.272.2203 tech@rst-engr.com	Drawing # 6622-4200 Sheet 1 of 4

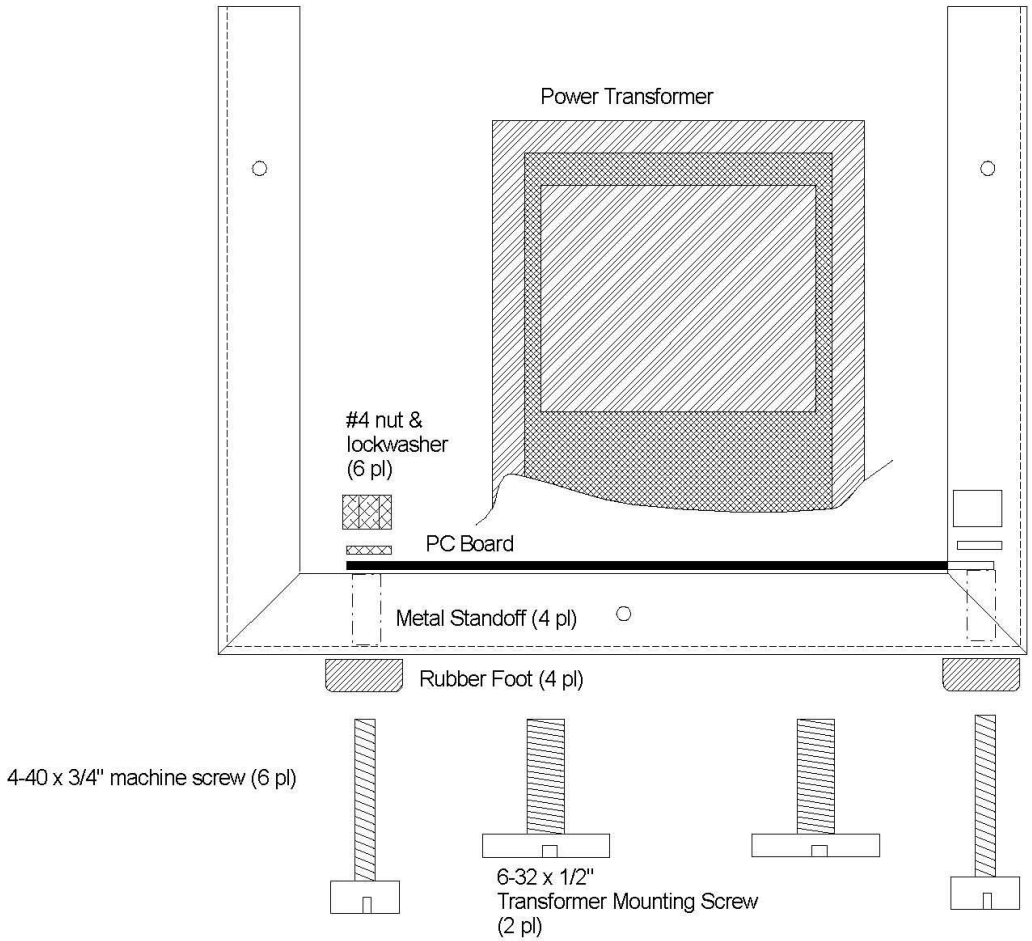

Assembly Drawing
Right Side View

Power Supply Main Chassis	Scale: 1:1	Drawn by: OWJ	Approved by:	RST Engineering	Drawing #
	Date: 20 Nov 01	Rev: B	Jim Weir	13249 Grass Valley Ave Grass Valley CA 95945 916.272.2203 tech@rst-engr.com	6622-4200 Sheet 2 of 4

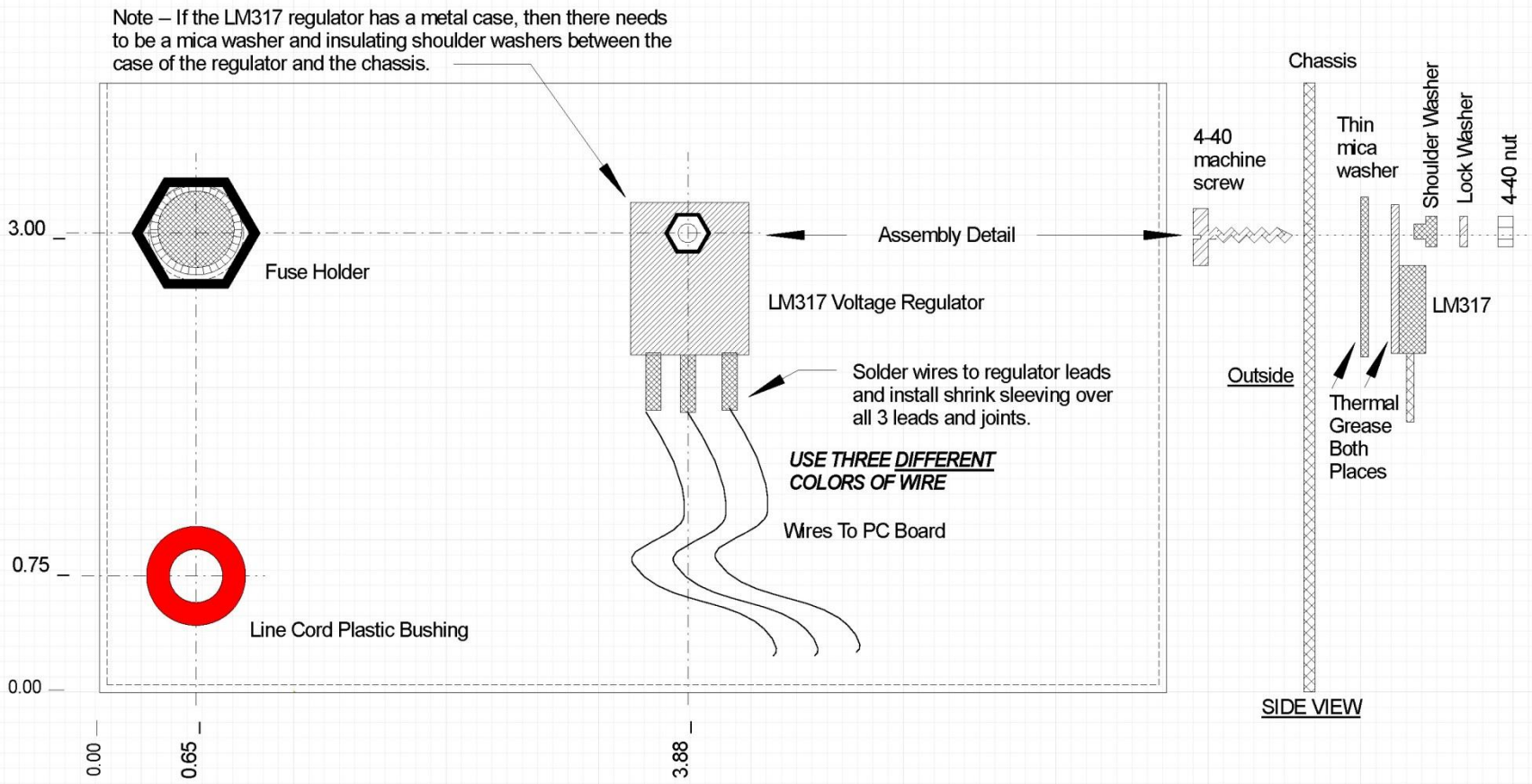

Assembly Drawing

Back Seen Through Front

Power Supply Main Chassis	Scale: 1:1	Drawn by: OWJ	Approved by:	RST Engineering	Drawing #
	Date: 7 May '17	Rev: E	Jim Weir	13249 Grass Valley Ave Grass Valley CA 95945	6622-4200
				530.272.2203 tech@rst-engr.com	Sheet 3 of 4

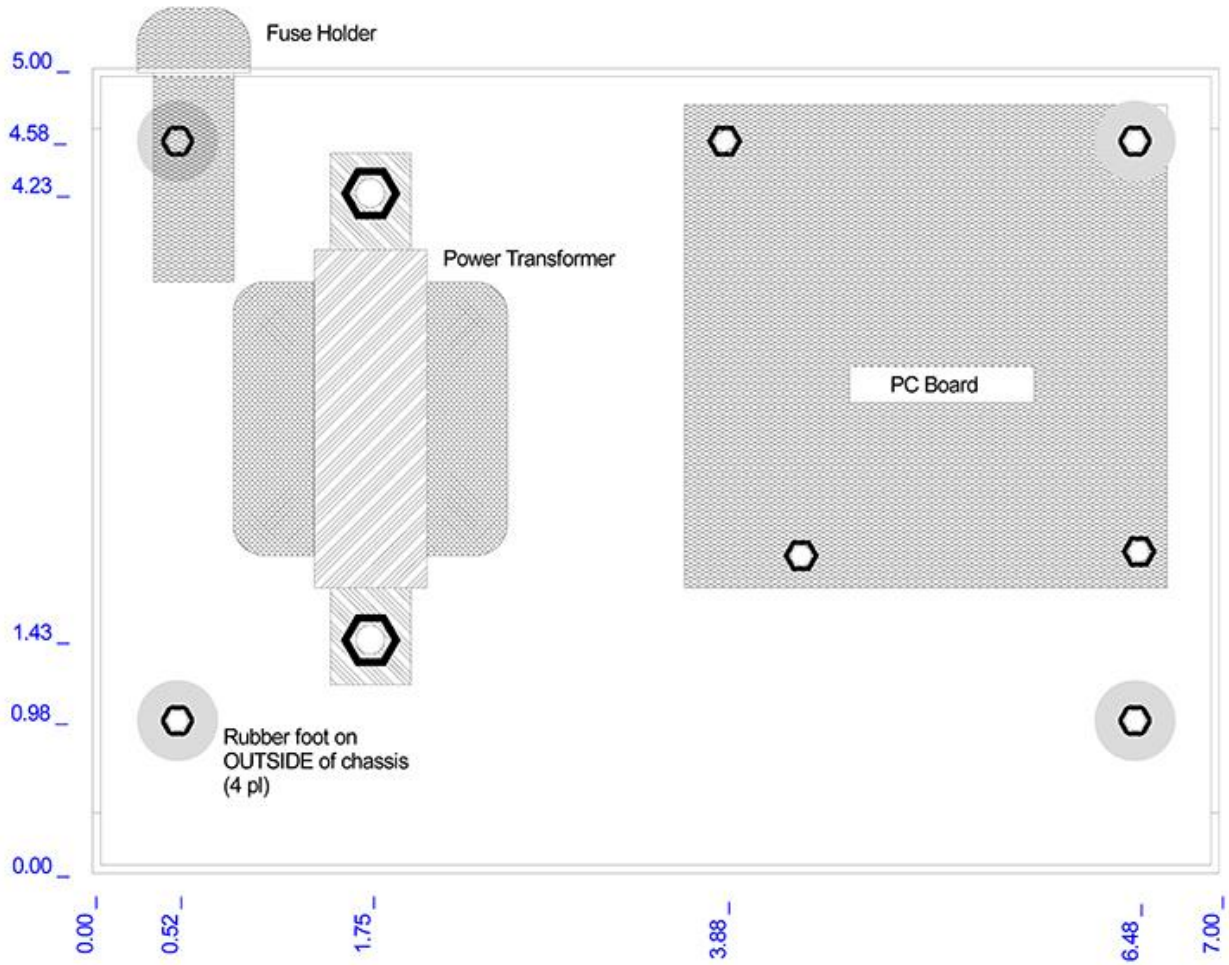

Note: Use shrink sleeving on both white and black power cord wires to the **MAXIMUM** extent possible. Do not let **ANY** metal objects touch connections with white or black wires.

Assembly Drawing
Bottom View

Power Supply Main Chassis	Scale: 1:1 Date: 28 Apr '16	Drawn by: OWJ Rev: E	Approved by: Jim Weir	**RST Engineering** 13249 Grass Valley Ave Grass Valley CA 95945 530.272.2203 tech@rst-engr.com	Drawing # 6622-4200 Sheet 4 of 4