Sierra College **CIE-01**
Jim Weir **530.272.2203**
jweir43@gmail.com
www.rstengineering.com/sierra

Lab 13

PhotoBug Project

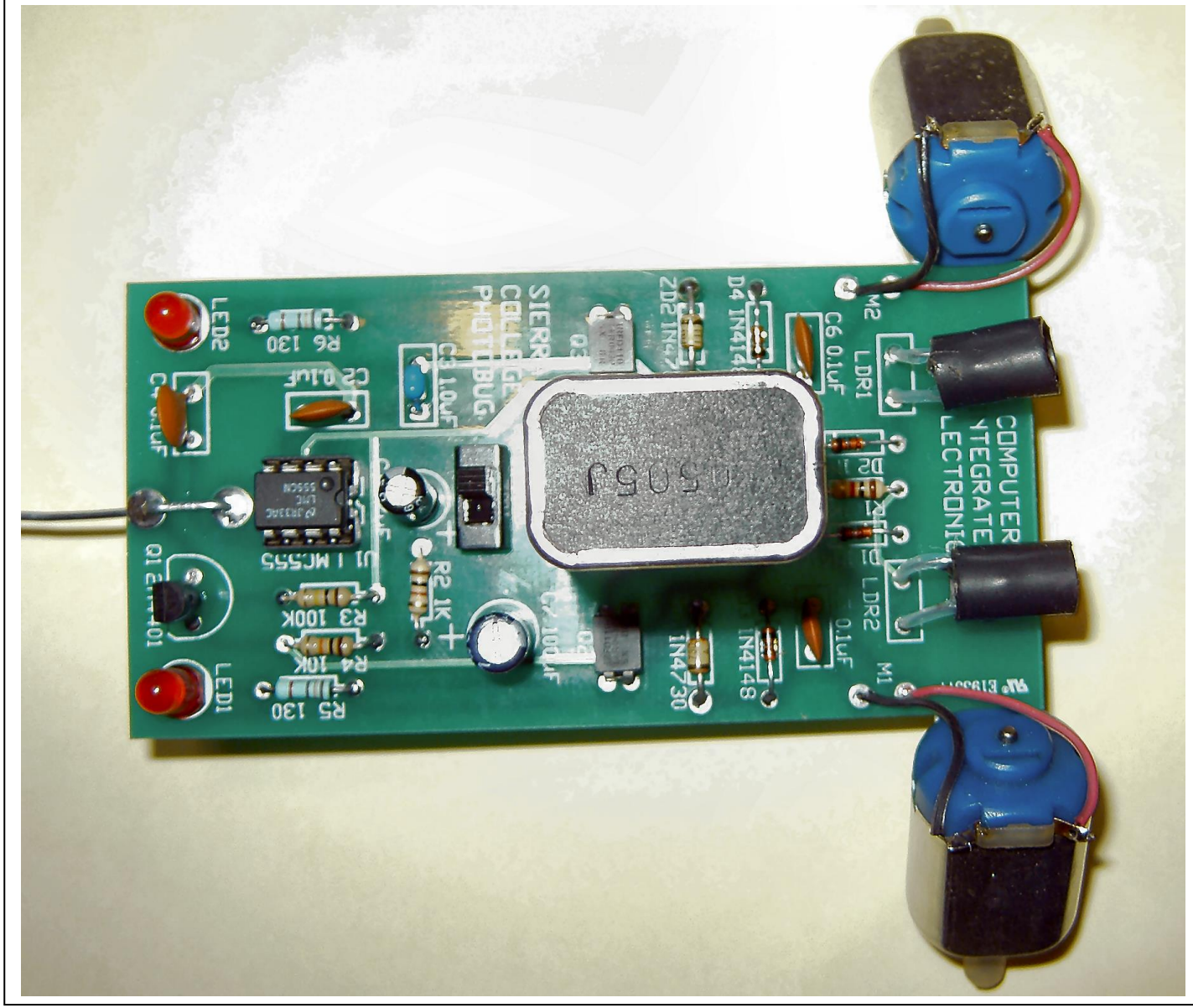

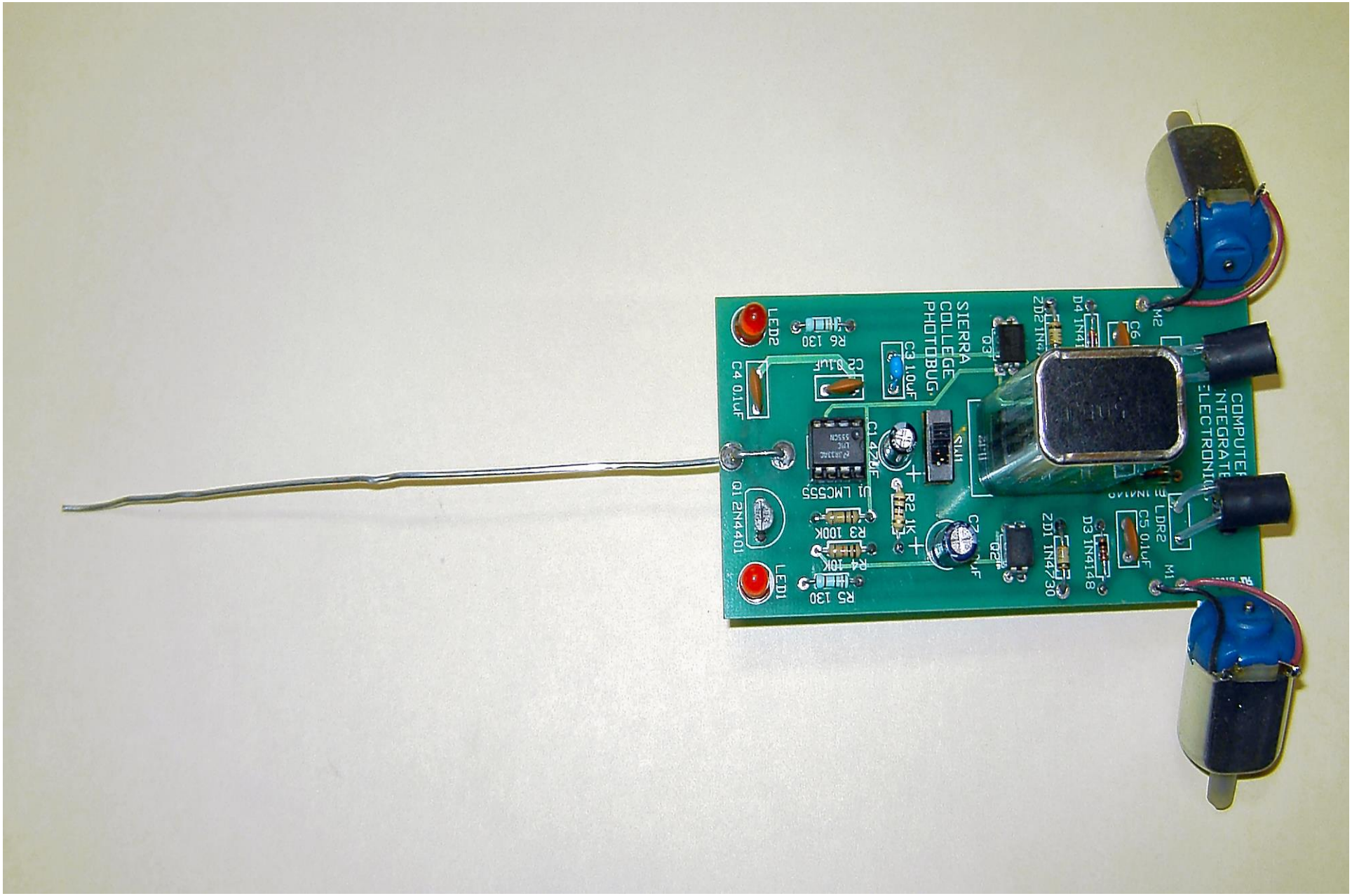
SIERRA
COLLEGE
PHOTOBUG
LED2
R6 130
C4 0.1uF
C3 1.0uF
C1 47uF
U1 LMC555
R2 1K
R3 100K
R4 10K
R5 130
Q1 2N4401
LED1
Q3
Q2
C7
D4 1N41
ZD2 1N4
ZD1 1N4730
D3 1N4148
C5 0.1uF
LDR2
M1
M2
C6

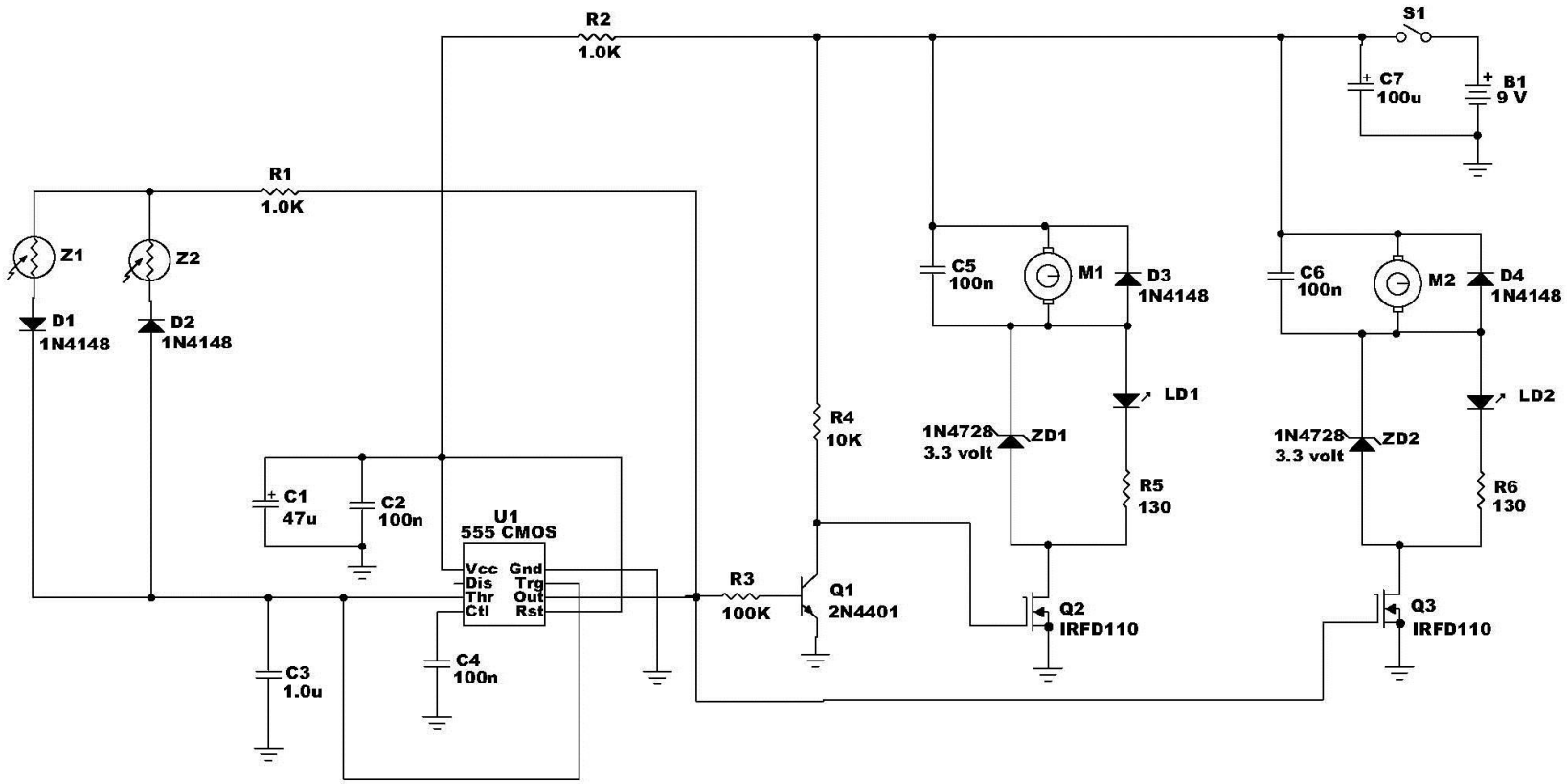

Rev	ID
A	0102-5801
Date: 24 Apr 07	Page: 1 of 1

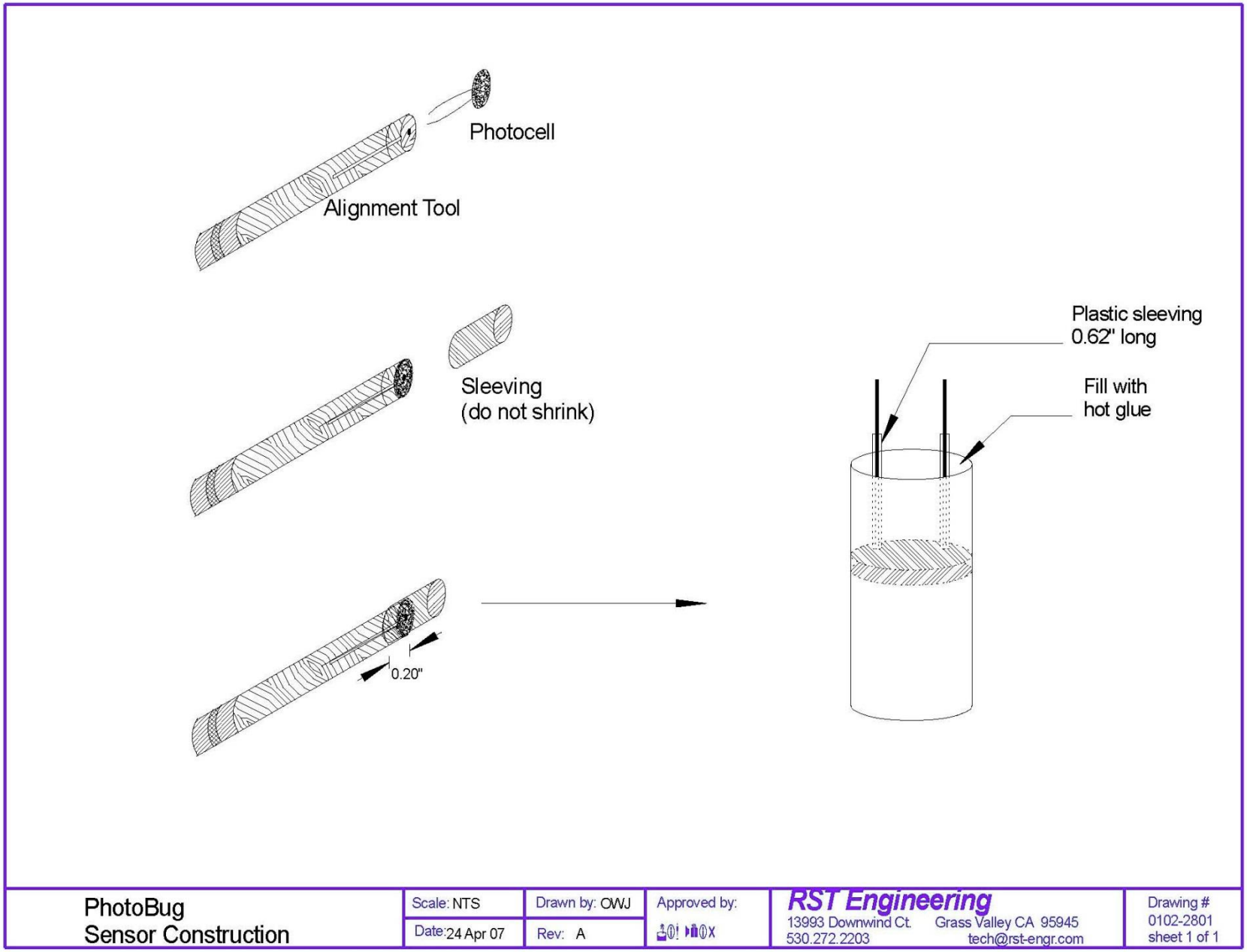

PhotoBug Sensor Construction	Scale: NTS Date: 24 Apr 07	Drawn by: OWJ Rev: A	Approved by:	RST Engineering 13993 Downwind Ct. Grass Valley CA 95945 530.272.2203 tech@rst-engr.com	Drawing # 0102-2801 sheet 1 of 1

PHOTOBUG CONSTRUCTION

1. Assemble two of the photo sensors into the plastic sleeving as shown in the drawing on the previous page. Set them aside to cool while assembling the rest of the project.

2. The PC Board has two sides to it. One side ("component") has the parts outline and parts names in white ink legend. The other side ("trace") has nothing but tinned pads and copper traces. All electronic components mount ON the white ink side with leads THROUGH the holes and soldered on the tinned pads side. Also, the "top" of the board has the words "COMPUTER INTEGRATED ELECTRONICS" and the "bottom" of the board is at Q1.

3. Identify the 9 volt battery snap connectors. One of the connectors is large and is hexagonal in shape. Place a roll rivet (eyelet) through the hole on the trace side of the board at the (+) battery location and place the board flat onto a bench or anvil so that the rivet is held into the hole. Place the large hex connector over the rivet shank extending out the component side of the board and set the rivet with the rivet setting tool. Similarly, set the smaller of the two connectors onto the (-) minus pad and set with the setting tool. Solder the rivets to the pads on the trace side of the board. (If you want to insure that no corrosion will affect your photobug over the years, CAREFULLY solder the rivet inside the body of the snap connectors.)

4. Unless instructed otherwise, install all electronic components as far down onto the PC Board as they will go without forcing or breaking them.

5. Install the following semiconductors:

a. 2N4401or 2N3904 bipolar transistor at Q1 (mounts above the board about ⅛")

b. IRFD110 field effect transistors at Q2 and Q3. Note the white bar at one end of the part legend. This indicates the two legs of the transistor that are joined by a bar at one end of the transistor.

c. 1N4148 silicon switching diodes at D1, D2, D3, and D4. These are the smaller orange colored diodes. Be sure that the black cathode stripe is installed the correct way on the board.

d. 1N4728 silicon zener diodes at ZD1 and ZD2. These are the larger brown diodes. Note the cathode stripe when installing these diodes.

e. Install an IC socket at U1. Install the integrated circuit LMC555 into the socket. Note either the "notch" or the small dot on the case of U1 indicating pin 1. Install the IC so that the notch or dot lines up with the notch shown on the board or the square pad on the board indicating pin 1.

f. Install red LEDs at LED1 and LED2. Match the "flat" on the LED case to the flat painted on the board.

6. Install the following capacitors:

    a. 100 µf electrolytic capacitor at C7 (observe polarity)

    b. 47 µf electrolytic capacitor at C1 (observe polarity)

    c. 1.0 µf ceramic capacitor at C3 (may be marked 105).

    d. 100 nf ceramic capacitors at C2, C4, C5, and C6 (may be marked 104)

7. Install the following resistors:

    a. 1.0kΩ (brown-black-red-gold) at R1 and R2

    b. 100kΩ (brown-black-yellow-gold) at R3

    c. 10kΩ (brown-black-orange-gold) at R4

    d. 130Ω (brown-orange-brown-gold) at R5 and R6

8. Mount the (hopefully now cool) photo sensors at LDR1 and LDR2. Do not bend the photo sensors over yet.

9. Mount the slide switch S1 at SW1. Slide the switch lever to the left (relative to the top of the board looking at the component side of the board).

10. Bolt the aluminum motor bracket to the pc board using the bots and nuts provided (use lockwashers on the nuts if you like). The assembly sequence goes: bolt through the hole on the component side of the board, bracket on the trace side of the board, lockwasher, nut. Finger tighten. Other bolt through other hole, then as above. Align the bracket as "square" to the edge of the board as possible and fasten the hardware securely.

11. Hot glue one of the motors to the motor bracket so that the exposed shaft end of the motor points down (away from the pc board). The blue plastic at the rear of the motor should be just touching the pc board and the two copper terminals should be "up" away from the pc board.

12. Hot glue the other motor to the other side of the motor bracket as symmetrically with the first motor as you can get it. Slide the rubber "tires" onto the motor shafts.

13. Wire the motors to the board as follows:

a. Solder a small red wire from the pc board top hole at M1 to the top terminal of motor M1.

b, Solder a small black wire from the pc board bottom hole at M1 to the bottom terminal of motor M1

c. Solder red and black wires from the pc board to M2 exactly as you did with M1.

14. Straighten out the paper clip to the extent possible. Insert the paperclip from the TRACE side of the board into the bottom hole. Bend it over until it fits through the hole just below U1. Solder both of the paperclip pads to firmly attach the paperclip to the board. Bend a slight radius into the tail end of the paperclip and bend the body of the paperclip until the pc board sits on a flat surface as level as possible.

15. Bend the photo sensors over so that they are "looking " forward. Bend them so that they are as symmetric as possible to the centerline of the pc board.

16. Stuff lightweight material (toilet paper works well) into the "eyes" of the photo sensors so that no light shines onto the surface of the sensor. Install a battery onto the board and switch the battery power on. Adjust the "tail" or rudder of the photobug to track as straight a line as possible on a hard floor surface.

17 Remove the "blinders" from the photo sensors and see how well the photobug tracks a light in a darkened room.