4 March 2017

RST Engineering

13993 Downwind Court
Grass Valley CA 95945
530.272.2203 voice only
www.rstengineering.com

APPAREO INFORMATION PACKET

Thank you for requesting the information packet on the Appareo line of products. We have assembled the most useful documents into this packet. If you have any questions, please feel free to contact us (email tech@rstengineering.com works best).

You may view our Appareo Stratus sales information at www.rstengineering.com or contact sales@rstengineering.com.

Some web sites that you may find interesting and/or informative:

https://www.faa.gov/news/safety_briefing/2017/media/MarApr2017.pdf

http://ipadpilotnews.com/2016/01/ads-b-traffic-101-2/

http://www.duncanaviation.aero/resources/straight-talk/ads-b

Jim Weir
VP Engineering, RST

STRATUS

by APPAREO

RST Engineering Edition

PRODUCT REFERENCE GUIDE

STRATUS ESG

Certified ADS-B OUT

- ✓ 1090 ES Transponder
- ✓ Built-in WAAS GPS
- ✓ GPS Antenna Included

<u>Stratus ESG Kit</u>
P/N: 153010-000007
Includes:

Certified Transponder
WAAS GPS Antenna
Stratus ESG Installation Kit

- Rack and Backplate
- 37 Pin DSUB Connector
- RF TNC Passthrough Adapter
- RF BNC Passthrough Adapter
- Screws (6)
- Strain Relief Backshell

APPAREO

STRATUS 2I

Non-Certified ADS-B IN

- ✓ Same feature set as Stratus 2S
- ✓ Requires connection to Stratus ESG
- ✓ No battery

Stratus 2i Kit
P/N: 153010-000025
Includes:

Stratus 2i Module (P/N 153010-000028)
Stratus 2i Installation Kit

- RF Interface cable (P/N 253030-000008)
- Power/Serial cable (P/N 353030-000013)
- Female 9 Pin DSUB connector
- BNC Jack to Blind Mate Adapter

APPAREO

INTERFACE KIT FOR STRATUS PORTABLES

- ✓ Continuous power to Stratus portables
- ✓ Access to the ADS-B and GPS antennas mounted outside the aircraft
- ✓ Two kits because of different power connector, depending on Stratus model

Interface Kit for Stratus Portables
P/N: 153010-000017 (Stratus 1S/2S)
P/N: 153010-000016 (Stratus 2)
Includes:

Power/Serial Interface Cable
- *(USB Micro B for Stratus 2; USB Type C for Stratus 1S/2S)*

RF Interface Cable
Connector plate kit
- 9 Pin DSUB connector w/strain relief (shown on plate)
- BNC connector (connects to back of ESG)
- BNC jack to blind mate adapter

APPAREO

Stratus 2i Installation

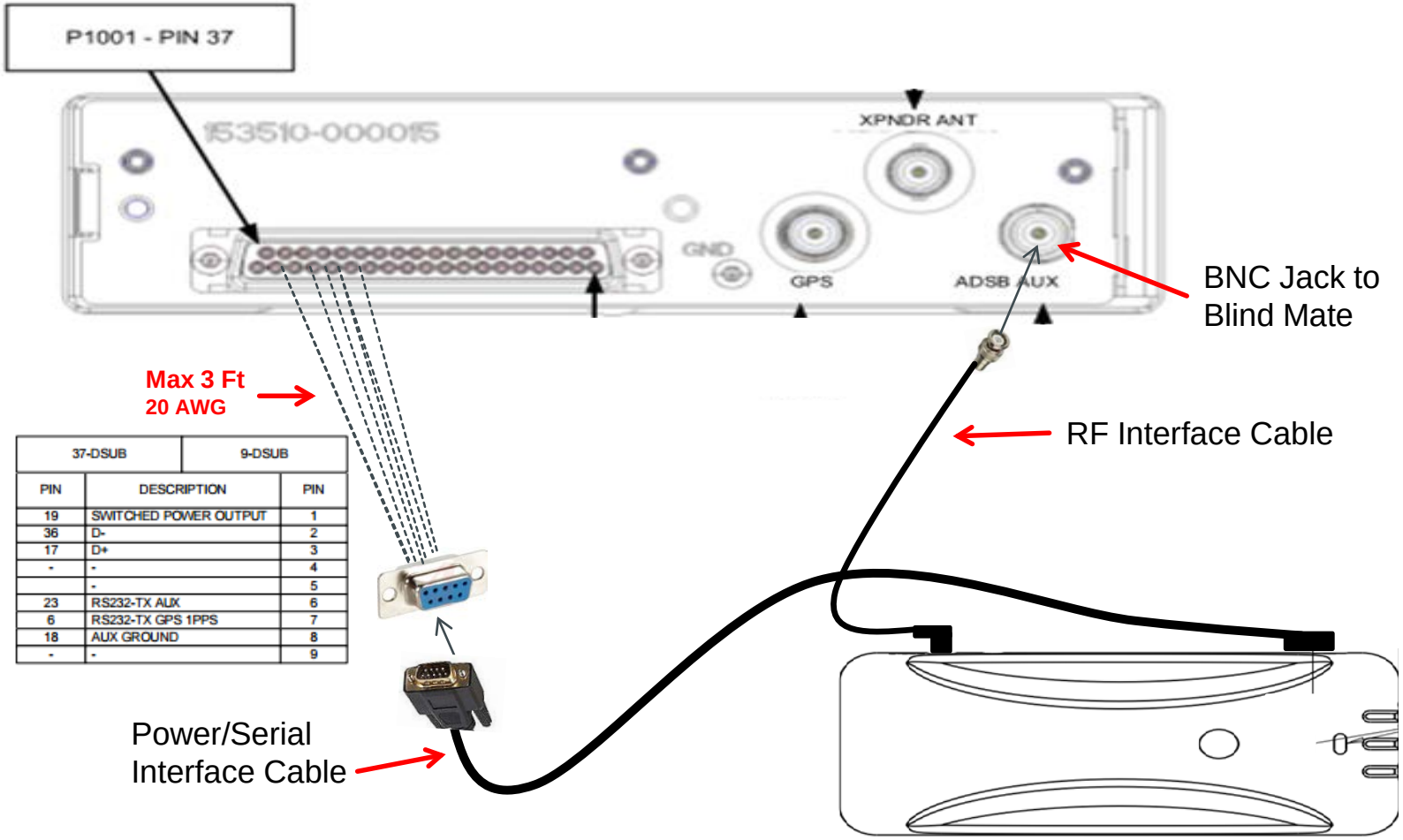

37-DSUB		9-DSUB
PIN	DESCRIPTION	PIN
19	SWITCHED POWER OUTPUT	1
36	D-	2
17	D+	3
-	-	4
	-	5
23	RS232-TX AUX	6
6	RS232-TX GPS 1PPS	7
18	AUX GROUND	8
-	-	9

APPAREO

Interface Kit Installation

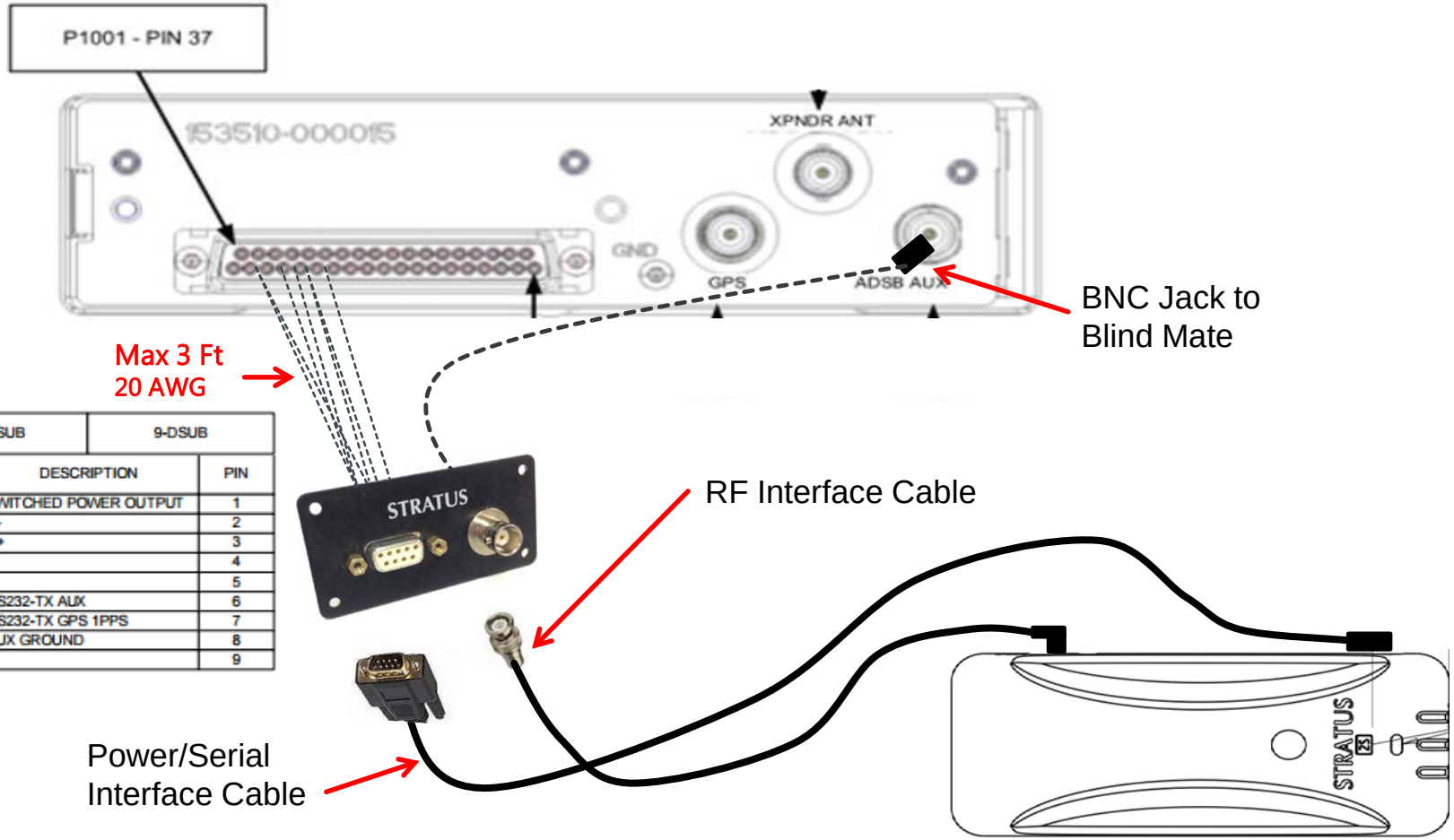

37-DSUB		9-DSUB
PIN	DESCRIPTION	PIN
19	SWITCHED POWER OUTPUT	1
36	D-	2
17	D+	3
-	-	4
	-	5
23	RS232-TX AUX	6
6	RS232-TX GPS 1PPS	7
18	AUX GROUND	8
-	-	9

APPAREO

STRATUS by APPAREO

ADS-B IN/OUT

ADS-B SIMPLIFIED

STRATUS ESG

- 1090 ES Transponder
- Built-In WAAS GPS
- GPS Antenna Included

$2,995

STRATUS ESG

READY FOR TAKEOFF

REPLACE YOUR OLD TRANSPONDER
AND BE ADS-B COMPLIANT FOR 2020

2020 COMPLIANCE IN ONE BOX

Stratus ESG is a TSO certified transponder that provides 2020 compliance in one box.

Comply with the ADS-B mandate by replacing your old transponder, and get an upgrade that feels like an upgrade.

- **1090 ES Transponder**
- **Built-In WAAS GPS**
- **GPS Antenna Included**

SIMPLE, LOW-COST INSTALLATION

Designed with the common 1.65” tall form factor, it’s an easy replacement for your existing transponder. Here’s what to consider for install time:

1. Replace old transponder in panel
2. Install GPS antenna (included in kit)
3. Reuse existing transponder antenna
4. Reuse existing altitude encoder

STRATUS ESGi

$3,495

THE ULTIMATE ADS-B EXPERIENCE

The Stratus ESGi kit includes the certified transponder and a non-certified ADS-B receiver (Stratus 2i) that was designed to work only with Stratus ESG.

Stratus 2i has the same feature set as Stratus 2S, but without the battery or internal antennas. When connected to Stratus ESG, this receiver provides the same industry-leading ADS-B and AHRS experience on ForeFlight Mobile that pilots have come to expect from the Stratus product family.

STRATUS ESG FEATURES

ADS-B Out	✓
1090 ES Transponder	✓
Built-In WAAS GPS	✓
GPS Antenna Included	✓

STRATUS 2i FEATURES

ADS-B In	✓
Subscription-Free Weather	✓
Dual-Band ADS-B Traffic	✓
Backup Attitude (AHRS)	✓
Flight Data Recorder	✓
Pressure Altitude Sensor	✓

appareo.com/stratus

STRATUS ESG SPECIFICATIONS

FEATURES

- 1090 ES (Mode S extended squitter)
- Built-in WAAS GPS
- Meets global mandates for ADS-B Out transponders
- Push-button operation
- Easy-to-use interface
- Pressure altitude monitor

TECHNICAL SPECIFICATIONS

Cooling Input	No fan required
Environmental Compliance	DO-160G
Software Compliance	DO-178B Level C
Hardware Compliance	DO-254 Level C
TSO Compliance	C112e (Level 2els, Class 1) C145d (Class Beta 1 GPS/WAAS) C166b (Class B1S)
Display	OLED
Transmitter Power	310 W

Bezel Height	1.69 in. (43 mm)
Bezel Width	6.38 in. (162 mm)
Depth	10.75 in. (273 mm) front of panel to connector backshell
Weight	3.29 lbs. (1.49 kg) including rack and connectors
Operating Temperature	-20°C to 55°C
Storage Temperature	-55°C to 85°C
Power Input	9.0 to 36.0 VDC, 15 W typical

DIMENSIONS

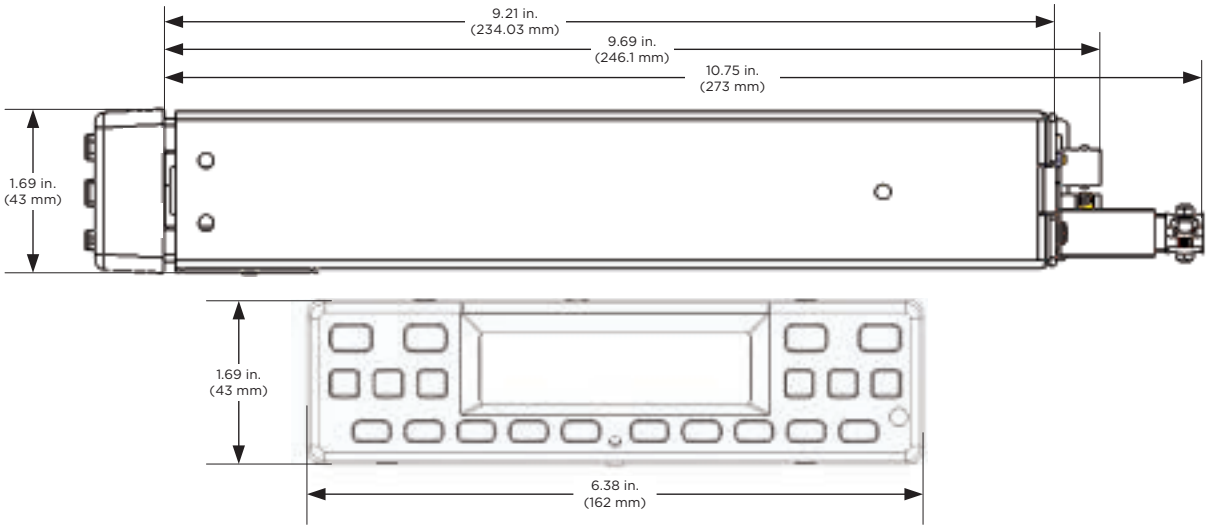

APPAREO

1810 NDSU Research Circle N • Fargo, ND 58102 • **APPAREO.COM/STRATUS**

STRATUS by APPAREO

STRATUS ESG

2020 COMPLIANCE IN ONE BOX

Stratus ESG is a TSO certified transponder that provides 2020 compliance in one box. It's a 1090 MHz extended squitter (ES) transponder with built-in WAAS GPS. Designed to replace legacy transponders, Stratus ESG is a solid state transmitter that provides 310 watts nominal power output. Its modern keypad makes entering a squawk code easy. The convenient VFR button minimizes pilot keystrokes.

SIMPLE INSTALLATION

Stratus ESG is a form-factor replacement for existing transponders — such as the popular KT 76A/C* — so installation is more time-efficient compared to remote boxes that need to be integrated with your old transponder. A TSO'd WAAS GPS antenna is included in the kit, and Stratus ESG can reuse an existing transponder antenna. It also accepts both serial and parallel (e.g. Gray code) inputs, so you can reuse most altitude encoders.

WHAT TO CONSIDER WHEN ESTIMATING INSTALLATION

- Replace old transponder in panel
- Reuse existing transponder antenna
- Reuse existing altitude encoder
- Install WAAS GPS antenna (included in the kit)

FEATURES

- 1090ES (Mode S extended squitter)
- Built-in WAAS GPS
- Meets global mandates for ADS-B Out transponders
- Push-button operation
- Easy-to-use interface
- Pressure altitude monitor

STRATUS ESG TECHNICAL SPECS

Bezel Height	1.69 in. (43 mm)
Bezel Width	6.38 in. (162 mm)
Depth	10.75 in. (273 mm) front of panel to connector backshell
Weight	3.29 lbs. (1.49 kg) including rack and connectors
Operating Temperature	-20°C to 55°C
Storage Temperature	-55°C to 85°C
Power Input	9.0 to 36.0 VDC, 15 W typical
Cooling Input	No fan required
Environmental Compliance	DO-160G
Software Compliance	DO-178B Level C
Hardware Compliance	DO-254 Level C
TSO Compliance	C112e (Level 2els, Class 1) C145d (Class Beta 1 GPS/WAAS) C166b (Class B1S)
Display	OLED
Transmitter Power	310 W

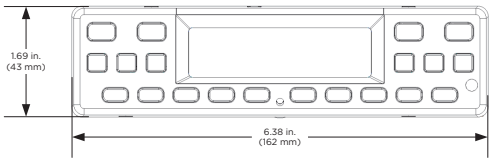

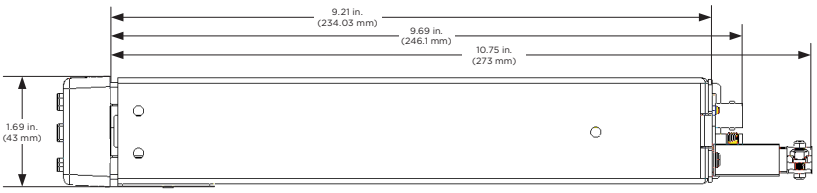

*KT 76A/C is a BendixKing product

APPAREO

1810 NDSU Research Circle N • Fargo, ND 58102 • APPAREO.COM/STRATUS

STRATUS ESG

Installation Instructions

Revision 1.5

APPAREO

APPAREO SYSTEMS, LLC
FARGO, NORTH DAKOTA 58102

Stratus ESG Installation Instructions

Document Number	Document Type	Last Revised	Rev	Sheet
600840-000031	Certification	8 June 2016	1.5	1 of 47

STRATUS ESG

Appareo Systems, LLC, 1830 NDSU Research Circle North, Fargo, ND 58102 USA.

Visit us on the web at www.appareo.com.
Questions? E-mail us at support@appareo.com.

Stratus ESG Limited Warranty

When purchasing Stratus ESG ("Product") manufactured by Appareo Systems, LLC ("Appareo"), the original end user ("Initial Customer") receives a limited warranty (Limited Warranty) from Appareo. This Limited Warranty outlines the Initial Customer's exclusive rights and remedies as relates to the Product.

The Initial Customer receives an expressed limited warranty (referred to as the "Limited Warranty") for the Product purchased from Appareo. The terms of the Limited Warranty are explained below. Additionally, State or Provincial law may adjust the terms of the Limited Warranty, or the State or Province may impose additional obligations or additional "implied warranties." To the extent necessary to comply with those laws, the terms of the Limited Warranty should be read to adjust to those requirements only to the extent necessary to comply with such local law.

If you are the corporation or individual installing or using the Product, you are asked to read the following terms and conditions carefully before installing or using this Product. By installing or using the Product, you consent to be bound by and become a party to the Limited Warranty. If you do not agree to the terms and conditions of the Limited Warranty, you should return the Product for a full refund prior to installation.

PRODUCT LIMITED WARRANTY

Appareo warrants to you, the Initial Customer, that the Product will be free from defects in material and workmanship for a period of time as indicated in the chart below from the Product purchase date from Appareo or an authorized Appareo dealer, subject to the terms of this Limited Warranty. Any Implied Warranty of Merchantability or for Fitness for a Particular Purpose, if applicable to the Product, is limited in duration to the period of ownership by the Initial Customer. This provision shall ***not*** create any Implied Warranty or Merchantability or of Fitness for a Particular Purpose that would not otherwise apply to the Product.

Product Type	Warranty Period
For TSO Installed Stratus ESG	2 Years or 800 flight hours, whichever comes first
For non-TSO Installed Stratus ESG	18 months from the date of purchase
For TSO Repaired or Newly Overhauled Stratus ESG	6 Months or 200 flight hours, whichever comes first
For non-TSO Repaired or Newly Overhauled Stratus ESG	6 Months from the date of shipment from the manufacturer

This Warranty is void if any part not supplied by Appareo is used in assembly or repair of the Product, or if the Product has been altered.

EXCLUSIVE REMEDIES UNDER LIMITED WARRANTY

If the Product proves to be defective in material or workmanship during the Warranty Period, and all Limited Warranty requirements have been met, your exclusive remedies, and Appareo's sole obligations, are that Appareo will repair or replace the Product under this Limited Warranty.

MAKING A LIMITED WARRANTY CLAIM

To make a Limited Warranty claim on your Product, you must do the following:

1. Call Appareo at (701) 356-2200, write to Appareo at 1830 NDSU Research Circle North, Fargo, ND 58102, or e-mail Appareo at support@appareo.com and provide the Product's serial number and date of purchase.

2. Provide reasonable proof of purchase (for example, a sales receipt) that establishes you as the Initial Customer (the original end-user consumer purchaser) and which provides evidence that the Product was purchased within the warranty period of the event for which you are making a claim for warranty service.

3. Appareo will provide you with a Return Materials Authorization number and shipping information for the return of your unit.

4. Upon receipt of the returned Product, Appareo will inspect it and make a determination as to validity of the warranty claim. Appareo will respond to you within 15 days of receipt of the Product.

5. If upon examination it is determined that the Product is operating within factory recommended specifications, you will be notified and may request that the Product be returned to you. You will be asked to pay a reasonable service charge and also for shipping expenses to and from Appareo.

6. If it is determined upon examination that the Product is not operating within factory recommended specifications, but that the source of the failure was outside of the scope of this Limited Warranty, you will be notified of the estimated cost for repair of the Product to factory specifications. At this time you may request that the Product be returned to you without further action or that Appareo repair the Product as per the provided estimate and return the product to you. In this case you will be billed for the repairs and for shipping expenses to and from Appareo.

7. If it is determined that the returned Product fall within the scope of this Limited Warranty, Appareo will repair or replace the Product at its discretion. Replacement Product may be new or factory refurbished at Appareo's discretion, and shall carry the warranty of the original Product. Following repair or replacement, Product shall be shipped to the same location in the same manner as was the returned Product. Appareo shall pay all associated shipping expenses.

THE LIMITED WARRANTY DOES NOT APPLY UNLESS THE INITIAL CUSTOMER:

1. Has properly operated the Product.

2. Has installed and maintained the Product properly per any installation or maintenance instructions provided.

APPAREO DOES NOT COVER OR UNDERTAKE ANY LIABILITY IN ANY EVENT FOR ANY OF THE FOLLOWING:

1. Loss of or damage to data, records, or software or the restoration of data or records, or the reinstallation of software.

2. Damage from any circumstance described as excluded below with respect to the product.

3. Damages from fire, flood, wind, rain, rising water, leakage or breakage of plumbing, abuse, misuse or alteration of the product.

NO DEALER WARRANTY

This is the exclusive warranty applicable to Appareo Products. No dealer has any authority to make any other warranty, modify, limit, or expand the terms of this Warranty in any fashion, or to make any representation or promise on behalf of Appareo.

EXCLUSION OF CONSEQUENTIAL AND OTHER DAMAGES

1. The sole and exclusive remedies of the Initial Customer are those provided by the Limited Warranty. Appareo excludes any liability for personal injury under the Limited Warranty. Appareo excludes any liability for direct, indirect, special, incidental or consequential damages, whether for damage to or loss of property, loss of profits, business interruption, or loss of information or data.

2. ***Danger****: Do not use for medical or life support equipment or other high risk activities!*

3. Appareo does not sell their Products for use in high-risk activities. The Product is not designed or intended for use in hazardous environments requiring fail-safe performance or for use in any circumstance in which the failure of the Product could lead directly to death, personal injury, or severe physical or property damage, or that would affect operation or safety of any medical or life support device (collectively “High Risk Activities”). Appareo expressly disclaims any express or implied warranty of fitness for High Risk Activities. Appareo does not authorize use of any of the Products in any High Risk Activities.

4. This Limited Warranty is governed by the laws of the United States and the State of North Dakota, without reference to conflict of law principles.

5. Contact Information: Appareo’s address is 1830 NDSU Research Circle North, Fargo, ND 58102. Their phone number is (701) 356-2200. Appareo is the warrantor under this Limited Warranty. You may also contact Appareo on the Internet at www.appareo.com

6. **CAUTION**: Any changes or modifications not expressly approved by the warranty and/or user documentation accompanying this device could void the user’s authority to operate the equipment.

EXPORT REGULATIONS

Certain Appareo products are subject to export controls by the U.S. Department of Commerce (DOC), under the Export Administration Regulations (EAR). Violation of U.S. law is strictly prohibited. You agree to comply with the requirements of the EAR and all applicable international, national, state, regional and local laws, and regulations, including any applicable import and use restrictions.

For further information or clarification regarding these regulations please contact Appareo.

Warnings

- The pilot must read the Stratus ESG Pilot's Guide (600890-000049) before their first flight.
- Squawk codes 7500 (hijacking), 7600 (radio failure), and 7700 (emergency) are reserved for emergencies. There may be other reserved codes, depending on the region you are flying in. It is the pilot in command's responsibility to comply with their jurisdiction's operating rules and regulations.

Record of Revision

Revision Number	Change Description	Revision Date	Inserted By
1.0	Initial Release	5/29/15	AAL
1.1	CM 10281	1/06/16	AAL
1.2	CM 10323	1/13/16	AAL
1.3	CM 10633	2/09/16	AAL
1.4	CM 11303	5/10/16	AAL
1.5	Updated commercial part number for 37 Pin DSUB Connector in Table 10	6/08/16	AAL

Related Documentation

Document Number	Title
Appareo 600845-000024	Stratus ESG Maintenance Manual
Appareo 600890-000049	Stratus ESG Pilot's Guide
Appareo 601837-000024	Stratus ESG Installation and Wiring Drawings
FAA AC 20-165B	Airworthiness Approval of Automatic Dependent Surveillance - Broadcast OUT Systems
FAA AC 43.13-1B	Acceptable Methods, Techniques, and Practices - Aircraft Inspection and Repair
FAA AC 43.13-2B	Acceptable Methods, Techniques, and Practices - Aircraft Alterations
RTCA DO-160G	Environmental Conditions and Test Procedures for Airborne Equipment

Vendor Information

Part	Vendor	Contact Information
42G15A-XT-1 (GPS antenna)	ANTCOM	Antcom Corporation 367 Van Ness Way, Suite 602 Torrance, California 90501 Phone: (310) 782-1076 http://www.antcom.com/
AV-74 (transponder antenna)	RAMI	Rami 14500 168th Avenue P.O. Box 858 Grand Haven, MI 49417 Phone: (616) 842-9450 http://www.rami.com/

Abbreviations, Terms, and Definitions

Abbreviation	Term	Definition
AC	Advisory Circular	Document provided by the FAA that provides airworthiness recommendations.
ACO	Aircraft Certification Office	Branch of the FAA that works with the applications for certifications.
ADS-B	Automatic Dependent Surveillance - Broadcast	Technology implemented by the FAA to provide surveillance and improved situational awareness to both pilots and air traffic controllers.
ATC	Air Traffic Control	Service that directs aircraft on the ground and through controlled airspace.
ATCRBS	Air Traffic Control Radar Beacon System	The surveillance system used by Air Traffic Control to augment radar operations.
BIT	Built In Test	A series of tests performed on start up to monitor the function of the equipment.
CFR	Code of Federal Regulations	Codification of the general and permanent rules and regulations published in the Federal Register by the executive departments and agencies of the United States Federal government.
EMI	Electromagnetic interference	Type of test conducted to ensure system performance when in an electromagnetic environment.
ESG		Part of the marketing name for Stratus ESG.
FAA	Federal Aviation Administration	Agency of the United States Department of Transportation with authority to regulate and oversee all aspects of civil aviation in the United States.
FCC	Federal Communications Commission	Branch of the government responsible for controlling the regulations around electronic equipment.
FMS	Flight Management System	System that automates the aircraft's flight plan.
GPS	Global Positioning System	Satellite-based navigation system that provides location and time information.
HF	High Frequency	Range of frequency between 3 MHz to 30 MHz.
Hz	Hertz	Unit of frequency based upon cycles per second.

IDENT	IDENT (Identification)	Transponder feature that allows for aircraft to be uniquely identified by Air Traffic Control by pulsing the aircraft's reply on ATC's monitors for 18 seconds.
MHz	megahertz	1,000,000 hertz.
SBAS	Satellite-Based Augmentation System	System of satellites that augments existing satellite systems and provides increased position accuracy.
STC	Supplemental Type Certificate	Type Certificate issued when an applicant has received FAA approval to modify an aircraft from its original design.
TIS-B	Traffic Information Service-Broadcast	Aviation information service broadcast provided to aircraft using both 1090 MHz ES and UAT.
TSO	Technical Standard Order	Minimum performance standard for specified materials, parts, and appliances used on civil aircraft (FAA definition).
VFR	Visual Flight Rules	A set of regulations for flying in which the pilot flies without using instruments in generally clear meteorological conditions.
VHF	Very High Frequency	Range of frequency between 30 MHz to 300 MHz.
WAAS	Wide Area Augmentation System	System of ground-based antennas whose precisely known locations are used to correct satellite signals and provide greater positional and integrity of service to aircraft in flight.

Table of Contents

List of Figures

List of Tables

1. About Stratus ESG

1.1. Overview

Stratus ESG by Appareo is a panel-mounted level 2els Class 1 Extended Squitter transponder. It is a Class B1S transponder which is ADS-B Out compliant. To support the ADS-B Out function, Stratus ESG contains a Class Beta 1 GPS/WAAS receiver. Stratus ESG responds to legacy Mode A/C interrogations and Mode S interrogations from both ground radar and airborne collision avoidance systems.

The most recent version of this document and other Stratus ESG documentation can be found at the Appareo Dealer Portal at http://appareo.com/dealer-portal.

1.2. TSO/FCC compliance

TSO
Stratus ESG is compliant with the following Technical Standard Orders:

Reference/Issue	Title
FAA TSO-C112e	Technical Standard Order: Air Traffic Control Radar Beacon System/Mode Select (ATCRBS / Mode S) Airborne Equipment
FAA TSO-C145d	Technical Standard Order: Airborne Navigation Sensors Using The Global Positioning System
FAA TSO-C166b	Technical Standard Order: Extended Squitter Automatic Dependent Surveillance - Broadcast (ADS-B) and Traffic Information Service - Broadcast (TIS-B) Equipment Operating on the Radio Frequency of 1090 Megahertz (MHz)

Table 1: TSO/FCC compliance

FCC
Stratus ESG has an FCC ID of 2AETC-1505005.

1.3. TSO deviations

TSO	Section	Deviation
TSO-C145d	Section 3, Subpart D	Environmental qualification testing was performed to DO-160G, not DO-160E.

Table 2: TSO deviations

1.4. Non-TSO functions

Below are Stratus ESG's non-TSO functions:

- VFR key (and configuration).

This non-TSO function does not interfere with Stratus ESG's compliance with the requirements of the TSOs listed in Section 1.2

1.5. Environmental qualifications

Stratus ESG is tested to DO-160G. The Stratus ESG Environmental Qualification form is found in Appendix A of this document.

1.6. Criticality level

Software level determination is based on the Functional Hazard Assessment (FHA) and Preliminary System Safety Assessment (PSSA). These assessments determined that the most severe failure conditions (see Table 3) are classified as Major. As such, the Software Assurance Level has been determined to be Major.

Major failure conditions would reduce the capability of the aircraft or the ability of the crew to cope with adverse operating conditions to the extent that it would be a significant reduction in safety margins or functional capabilities or a significant increase in crew workload. Software whose anomalous behavior would cause or contribute to a failure of the system function resulting in a Major failure condition for the aircraft is identified as Level C.

Function	Description	Classification
ATCRBS / Mode S Transponder	Malfunction of the ATCRBS / Mode S transponder function without warning	Major
ADS-B Out	Broadcast of incorrect ADS-B messages without warning	Major
GPS/SBAS Receiver	Loss or malfunction of the GPS/SBAS receiver function	Major
Pressure Altitude Output	Failure of the pressure altitude output function	Major
RF Feed-Through	Malfunction of the RF feed-through function without warning	Major

Table 3: Criticality level

1.7. Embedded Hardware and Software

The embedded hardware and software information listed below is current as of the time of publication of this document.

Description	Part number	Revision (or later FAA approved)
Embedded Hardware (FPGA)	501010-000109	R04
Software (DSC)	501010-000113	R04

Table 4: Software

1.8. Equipment specifications

1.8.1. Equipment dimensions

Characteristic	Dimension
Bezel Width	6.38 inches (162 mm)
Bezel Height	1.69 inches (43 mm)
Rack Width	6.32 inches (160.4 mm)
Rack Height	1.65 inches (42 mm)
Depth from back of bezel to end of strain relief on rack (not compensating for wire bend radius)	10.75 inches (273 mm)

Table 5: Equipment dimensions

1.8.2. Equipment weight

Component	Weight
Stratus ESG Unit Weight	2.75 lbs. (1.25 kg)
Stratus ESG Total Installed Weight (Transponder with rack and connectors)	3.29 lbs. (1.49 kg)

Table 6: Equipment weight

1.8.3. Electrical specifications

Characteristic	Specification
Altitude	Up to 25,000 ft
External Suppression Input	Low ≤ 0.5 V High ≥ 5 V (suppressed)
Mode A Capability	4096 Identification Codes
Mode C Altitude Capability	Parallel altitude encoder: up to 62,700 ft Serial altitude encoder: up to 126,700 ft
Mode S Capability	Parallel altitude encoder: up to 62,700 ft Serial altitude encoder: up to 126,700 ft
Operational Temperature Range	-20°C to +55°C
Receiver Frequency	1030 MHz
Receiver Sensitivity	-74 dBm nominal for 90% replies
Transmitter Frequency	1090 MHz ± 1 MHz
Transmitter Power	310 Watts nominal

Table 7: Electrical specifications

1.8.4. Power requirements

Characteristic	Specification
Input Voltage Range	11 to 36 VDC
Nominal Current Draw	0.28 A at 28 VDC 0.5 A at 14 VDC
Power Input	8 W Typical 59.5 W Max

Table 8: Power requirements

1.9. Required tools

The following tools are needed for installation of Stratus ESG.

Tool	Part Number	Used For
3/32” hex driver		Securing locking mechanism through the faceplate
External retaining ring pliers		RF pass through adapter
Crimp tool	M22520/2-01	DSUB pins
Positioner	M22520/2-08	DSUB pins
Insertion/Extraction tool	M81969/39-01	DSUB pins

Table 9: Required tools

1.10. Required hardware

The following parts are required for the installation of Stratus ESG.

Supplied parts:

Item	Appareo Part Number	Commercial Part Number	Quantity
Backplate	153510-000015	-	1
Transponder	153510-000017	-	1
Stratus ESG Rack	153540-000027	-	1
RF TNC Pass Through Adapter	251015-000077	-	1
RF BNC Pass Through Adapter	251015-000078	-	1
37 Pin DSUB Connector	251015-000074	M24308/2-4F	1
Screw	356060-000007	-	6
Strain Relief Backshell	356070-000006	M85049/48-1-4F	1

Table 10: Required hardware (supplied parts)

Additional parts:

Item	Appareo Part Number	Commercial Part Number	Quantity
#6-32 x 100° Flat Head SS Screw	-	MS24693, AN507R or other approved fastener	6

Table 11: Required hardware (additional parts)

1.11. Compatible equipment

Stratus ESG requires input from a GPS antenna, transponder antenna, and altitude encoder. This section describes the requirements for the antennas and altitude encoders that must be installed on the aircraft.

Inputs from systems described below may be pre-existing. If these systems do not exist or have specifications outside those described, selection of new equipment will be required. These installation instructions do not cover the installation of the antennas or other input sources, and they should be installed per manufacturer's instructions.

1.11.1. Antennas

The GPS and transponder antennas should be installed using the antenna manufacturer's instructions. Wiring must be installed in accordance with FAA AC 43.13-1B and AC 43.13-2B.

1.11.1.1. GPS antenna

Stratus ESG requires an active antenna with the specifications of either TSO-C190 or TSO-C144.

If meeting the specifications of TSO-C190, the GPS antenna must meet the following:

- Powered at 5 Volts
- Gain of 30 dB +- 5 dB
- Qualified DO-160E Lightning, Zone 2A
- Qualified DO-160E Icing, Category C

Alternatively, the following TSO-C144 antenna is compatible:

Manufacturer	Part Number
AntCom	42G15A-XT-1

Table 12: Compatible GPS antenna

The antenna should be installed using the antenna manufacturer's instructions. The antenna must also be installed at least 2 feet away from any other comm transmitter or transmitter antenna in a location that does not break line of sight with satellites. Typical installation locations are on the top of the aircraft or on the empennage with consideration for line of sight with satellites.

All wiring should have a cable loss of minimum 2 dB and maximum 7 dB. The standard installation has 3 BNC/TNC connections. Any additional BNC/TNC connections should estimate a 0.2 dB loss per connection and be taken into consideration for maximum dB loss.

NOTE: Using RG400 the minimum cable length is 10 feet and the maximum length is 37 feet. If the installation requires you to go outside of these length specifications, the selection of coax should be 50 ohm.

If installing on a pressurized aircraft, follow the instructions as indicated by an aircraft STC. Otherwise, seek other approval. Other provisions could be made by contacting your Regional Aircraft Certification Office (ACO).

1.11.1.2. Transponder antenna

Stratus ESG requires a passive antenna with the specifications of TSO-C74d or TSO-C66. The following antenna is an example of an antenna that meets these specifications. The installation is not limited to this antenna.

Manufacturer	Part Number
Rami	AV-74

Table 13: Compatible transponder antenna

The antenna should be installed using the antenna manufacturer’s instructions. The antenna should be mounted vertically on the bottom of the aircraft and a minimum of:

- 6 feet away from DME antenna
- 3 feet away from ADF antenna or any other communication antenna
- 3 feet away from TCAS antenna
- 3 feet away from Stratus ESG itself to prevent self-interference

Keep the antenna away from any protruding metal such as engines, propellers, other antenna masts, landing gear (and/or doors), and access doors; breaks in the antenna's ground plane; or anything that can affect the radiation pattern. If mounted on a composite aircraft, a conductive ground plane should be added to the aircraft in order for the radiation pattern of the antenna to be maximized.

NOTE: A determination should be made whether the current cabling is acceptable for the installation. Using RG400, the maximum cable length is 14 feet with a maximum of 2 dB loss. If the installation requires more length, select other 50 ohm coax that will not exceed the maximum of 2 dB loss.

1.11.2. Altitude encoders

Stratus ESG requires input from an independent altitude encoder. Stratus ESG will connect to an encoder that has a Gillham (gray code) connection or a serial altitude encoder output on a RS232 port. The altitude encoder must meet the performance requirements of TSO-C88 (a or b). Serial altitude encoders must be Trimble/Garmin or Shadin/RMS altitude encoders.

The altitude encoder should be installed using the altitude encoder manufacturer's instructions.

NOTE: The altitude encoder might have a longer power up time than Stratus ESG. While the altitude encoder powers up, the altitude field will be replaced by dashes. If the altitude encoder has not powered up within five minutes, an error message will appear. Once the attitude encoder is completely powered on and transmitting data, the error message will disappear.

2. Installing Stratus ESG

2.1. Unpacking/inspection requirements

When unpacking Stratus ESG, visually inspect for any damage to the unit or missing components. If damage or missing parts are present, contact Appareo.

2.2. Limitations for installation

This article meets the minimum performance and quality control standards required by a technical standard order (TSO). If you are installing this article on or in a specific type or class of aircraft, you must obtain separate approval for installation.

The following limitations should be taken into consideration when installing Stratus ESG.

Aircraft
Stratus ESG may not be acceptable for installation on all aircraft makes and models.

Cooling air
Stratus ESG does not have an air cooling duct. Do not install Stratus ESG near a heat source. An alternate method of cooling is required if the unit must be installed near a heat source.

GPS
Stratus ESG cannot be used as a GPS position source for navigation for LNAV approaches outside of SBAS coverage.

2.3. Backplate and rack installation

Refer to Stratus ESG Installation and Wiring Drawings (601837-000024) to assemble the mounting rack with the hardware specified in Table 10. Mount the rack to the aircraft using the six holes on the side of the rack with the hardware specified in Table 11.

Refer to Section 1.8 for dimensions and weight information.

NOTE: For an optimal fit, mounting brackets may be required, but are not supplied. If additional brackets are needed, they should be fabricated for each individual installation.

NOTE: Assure that the unit is supported in the back. This may require additional support.

2.4. Unit installation

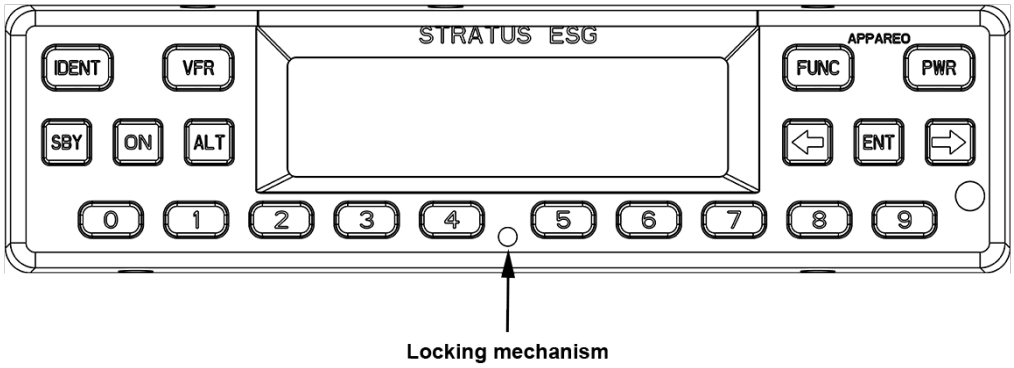

1. Adjust the locking mechanism on Stratus ESG using a 3/32 hex wrench so that the front lobe is in a vertical position. Insert the unit into the mounting rack until the faceplate is flush with the front end of the rack.

2. Tighten the locking mechanism clockwise with the 3/32 hex wrench until it is tight and the connectors have mated. Do not overtighten. If the mechanism will not tighten, verify that Stratus ESG is properly seated in the rack.

2.5. Cleaning

Use a dry cloth to clean Stratus ESG. If necessary, you can use a lightly damp cloth with a solution of mild detergent. Do not use cleaners containing ammonia, acetone, or other strong acids or bases to clean the Stratus ESG display or faceplate.

2.6. Circuit protective device marking

If Stratus ESG is replacing an existing transponder, ensure that it is sufficiently marked.

If Status ESG is a new installation, ensure that the labeling is in accordance with AC 43.13-2B, Chapter 2, Section 207, Sub-Section f., Paragraph (4).

3. Cabling and wiring

This section describes cabling and wiring specifications, pin-out information, and antenna connection procedures.

CAUTION: Stratus ESG must be OFF during wiring to avoid damaging the device.

3.1. Cabling and wiring specifications

Wiring must be installed in accordance with FAA AC 43.13-1B and AC 43.13-2B and will be supplied by the aircraft installer. Wiring will be 20-24 gauge; see Stratus ESG Installation and

Wiring Drawings (601837-000024) for exact specifications. The wire length and routing will vary by installation.

3.2. Pins

The following are the pin assignments and pin-out for Stratus ESG.

NOTE: Not all pins will be used for all configurations. See the sub-sections below to determine which pins will be used for your installation.

Pin #	Pin Name	I/O
1	Aircraft Ground	-
2	Aircraft Power	-
3	RS232-RX Maintenance	In
4	-	-
5	RS232-RX Altitude	In
6	RS232-TX GPS 1PPS	Out
7	External Standby	In
8	Software Update Enable	In
9	Altitude A1	In
10	Altitude A4	In
11	Altitude B2	In
12	Altitude C1	In
13	Altitude C4	In
14	External Suppress In	In
15	28V Lighting Bus HI	In
16	-	-
17	AUX +5V Power	Out
18	AUX Ground	-
19	AUX +5V Power	Out
20	Aircraft Ground	-
21	Aircraft Power	-
22	RS232-TX Maintenance	Out
23	RS232-TX AUX	Out
24	RS232-TX Altitude	Out
25	External IDENT	In
26	External Squat Switch	In
27	Altitude D4	In
28	Altitude A2	In
29	Altitude B1	In
30	Altitude B4	In
31	Altitude C2	In
32	External Suppress I/O	I/O
33	14V Lighting Bus HI	In
34	-	-
35	-	-

36	Aux +5V Power	Out
37	Altitude Common (GND)	-

Table 14: Pin assignments

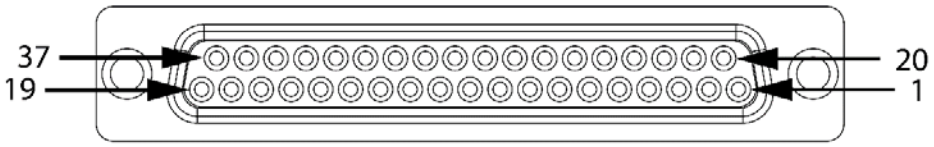

Figure 1: Pin-out

Refer to the wiring diagrams in Stratus ESG Installation and Wiring Drawings (601837-000024) to complete wiring. The sections below describe the function of each pin in more detail.

3.2.1. Power

Stratus ESG requires a 5 amp circuit breaker. A minimum of 2 ground pins should be tied.

Pin #	Pin Name	I/O
1	Aircraft Ground	-
2	Aircraft Power	-
18	Aircraft Ground	-
20	Aircraft Ground	-
21	Aircraft Power	-

Table 15: Power pin assignments

3.2.2. Altitude

Stratus ESG can be connected to either a parallel or serial altitude encoder. The pins utilized will depend on the type of altitude encoder.

For parallel altitude encoders:

Pin #	Pin Name	I/O
9	Altitude A1	In
10	Altitude A4	In
11	Altitude B2	In
12	Altitude C1	In
13	Altitude C4	In
27	Altitude D4	In
28	Altitude A2	In
29	Altitude B1	In
30	Altitude B4	In
31	Altitude C2	In
37	Altitude Common (GND)	-

Table 16: Parallel altitude encoder pin assignments

For serial altitude encoders:

Pin #	Pin Name	I/O
5	RS232-RX Altitude	In

Table 17: Serial altitude encoder pin assignments

NOTE: Pin 24 (RS232 TX Altitude) can be used as a serial altitude source for other equipment.

3.2.3. Suppression

The External Suppression pins are used to suppress signals from a shared antenna, DME, or other source of interference.

Pin #	Pin Name	I/O
14	External Suppress In	In
32	External Suppress I/O	I/O

Table 18: Suppression pin assignments

NOTE: Only one suppression may be connected.

3.2.4. Lighting

Stratus ESG can be connected to the aircraft lighting bus to control the brightness with a panel control. To connect to the lighting bus, connect **one** of the following pins, depending if the aircraft runs at 28V or 14V.

Pin #	Pin Name	I/O
15	28V Lighting Bus HI	In
33	14V Lighting Bus HI	In

Table 19: Aircraft lighting bus pin assignments

To control brightness with the ambient light sensor, do not connect these pins and select the ambient light sensor during backlight source configuration.

3.2.5. External IDENT

External IDENT can be wired to an external switch to transmit an IDENT response.

Pin #	Pin Name	I/O
25	External IDENT	In

Table 20: External IDENT pin assignment

3.2.6. External standby

External Standby is used in case of a dual transponder setup. Use this to suppress the Stratus ESG when not in use. To put Stratus ESG into standby mode, ground pin 7.

Pin #	Pin Name	I/O
7	External Standby	In

Table 21: External standby pin assignment

3.2.7. Squat switch

The Squat Switch input is connected when the aircraft has a squat switch. The configuration you select in Section 4.9 will determine if the squat switch is closed when on the ground or closed when airborne.

Pin #	Pin Name	I/O
26	External Squat Switch	In

Table 22: Squat switch pin assignment

3.3. Connecting antennas

After antennas have been installed according to manufacturer's instructions, use the wiring specified in Section 1.11.1 to connect the GPS and transponder antennas to the back of Stratus ESG, following the Stratus ESG Installation and Wiring Drawings (601837-000024).

NOTE: The transponder antenna uses a BNC connector, and the GPS antenna uses a TNC connector.

4. Configuring Stratus ESG

If it is the first time the device has been configured, press the **PWR** key. It will automatically enter into configuration mode.

To enter into configuration mode during subsequent configurations, while Stratus ESG is off, hold the **FUNC** key. Then, press and release the **PWR** key.

NOTE: Stratus ESG must be powered off to enter into configuration mode.

While in configuration mode, use the following keys:

Key	Function
FUNC	Cycle through the configuration screens
	Cancel an input
ENT	Edit a configuration
	Confirm an input
Arrow keys	Cycle through the configuration screens
	Cycle through selections within configurations
Number keys	Input numbers, letters, or spaces
PWR	Exit configuration mode

Table 23: Keys used during configuration

Sometimes, a textual or non-numerical input will be required. If this is the case, press the number that is associated with the letter group you want to input, according to the graphic on the screen. To cycle through the letters associated with each number, press the number key repeatedly until the letter you want to input appears. You can input a space after cycling through all of the letters for a particular number key. Once the correct character is selected, use the right arrow key to advance to the next field to enter the next character in the sequence.

4.1. ICAO address

Enter the aircraft's 6 digit hex code.

4.2. VFR squawk

Enter the VFR squawk code. The default factory setting is 1200.

NOTE: If you enter an emergency squawk code (7500—hijacking, 7600—radio failure, or 7700—emergency), a warning will appear. Press **ENT** to clear the warning and enter a new squawk code.

4.3. Aircraft registration

Enter the aircraft's tail number (registration number).

4.4. Aircraft airspeed category

Select the range of numbers that includes the aircraft's maximum airspeed.

4.5. Aircraft category

Select the category that best describes the aircraft:

- Light (<15,550 lbs)
- Small (15,500-75,000 lbs)
- Rotorcraft

4.6. Aircraft length

Select the range of numbers that includes the aircraft's length.

4.7. Aircraft width

Select the range of numbers that includes the aircraft's width (wingspan).

4.8. Altitude format

Select the pilot's preferred unit to display altitude in:

- Flight Level
- Feet
- Meters

4.9. Squat switch

Select the squat switch options:

- **None**: the aircraft does not have a squat switch
- **Low when on ground**: the squat switch is closed when on the ground
- **Low when airborne**: the squat switch is closed when airborne

4.10. Altitude source

Select the altitude source based on the type of altitude encoder in the aircraft:

- **Parallel**: Parallel altitude encoder.
- **Serial—trim/gar**: Serial altitude encoder: Trimble/Garmin
- **Serial—trim/gar-25 f**: Serial altitude encoder: Trimble/Garmin (if altitude input supports increments of 25 ft or less)
- **Serial—shad/rms**: Serial altitude encoder: Shadin/RMS
- **Serial—shad/rms-25 ft**: Serial altitude encoder: Shadin/RMS (if altitude input supports increments of 25 ft or less)

4.11. Backlight source

Select the pilot's preferred backlight source.

- Ambient light sensor
- Lighting bus

4.12. Backlight slope

Adjust the backlight control slope to a number between 0 and 100. A low number will brighten the display when there is a large ambient light change, and a high number will brighten the display when there is a small ambient light change.

4.13. Backlight offset

Adjust the backlight control offset to a number between 0 and 100. A low number will cause the backlight to display dimmer, and a high number will cause the backlight to display brighter.

4.14. Backlight response time

Adjust the backlight control response time to a number between 0 and 100. A low number will cause the backlight to adjust to ambient light changes more quickly, and a high number will cause the backlight to adjust to ambient light changes more slowly.

4.15. GPS antenna lateral offset

Select the measurement that most closely represents the distance from the lateral center of the aircraft to the GPS antenna to the nearest two meters.

- 2M L
- 4M L
- 6M L
- 0M
- 2M R
- 4M R
- 6M R

4.16. GPS antenna longitudinal offset

Select the measurement that most closely represents the distance from the front of the aircraft to the GPS antenna to the nearest two meters.

- 2M
- 4M
- 6M
- 8M
- ...
- 54M
- 56M
- 58M
- ≥ 60M

4.17. ADS-B In capability

Select the ADS-B In capability of the aircraft, installed or portable.

- UAT
- 1090 ES
- UAT and 1090 ES
- None

NOTE: There are currently no known ADS-B In solutions that provide only 1090 ES.

4.18. SBAS service provider

Select the SBAS service provider:

- WAAS (North America)
- EGNOS (Europe)
- MSAS (Japan)
- GAGAN (India)
- SDCM (Russia)
- Automatic (automatically chooses service provider based on location)

Choose **Automatic** if the pilot might change regions during the operation of Stratus ESG.

4.19. Diagnostic screens

The following screens are used for diagnostic purposes only and usually do not require any input from the installer.

4.19.1. GPS week number rollovers

The GPS week number rollovers screen tracks the number of GPS rollovers, which occur every 1024 weeks (19.7 years). The screen should display the following values, depending on the year:

Dates	Rollover number
August 22, 1999 – April 6, 2019	1
April 7, 2019 – November 20, 2038	2

If the value shown on the screen is incorrect, edit the configuration and select the correct rollover number.

4.19.2. Altitude input diagnostic

The altitude input diagnostic screen shows the current gray code altitude input from the parallel altitude encoder and also displays the current altitude. You can use this screen to verify that a parallel altitude encoder is properly connected. If a serial altitude encoder is connected, or there is no altitude encoder connected, the altitude input will display all 0's.

4.19.3. External inputs diagnostic

The external digital inputs diagnostic screen shows if the IDENT and standby modes are active or inactive. It also shows if the squat switch is indicating that the aircraft is ground, airborne, or unknown. You can use this screen to verify that the squat switch settings are properly configured.

4.19.4. Analog inputs diagnostic

The analog inputs diagnostic screen shows the current reading of the lighting bus and ambient light sensor to the nearest percentage, and the current reading of the internal temperature sensor to the nearest degree Celsius.

4.19.5. GPS receive diagnostic

The GPS receive diagnostic screen shows the current reading of the GPS latitude, GPS longitude, and Navigation Integrity Category (NIC).

4.19.6. GPS CN0 diagnostic

The GPS CN0 diagnostic screen shows the current value of GPS CN0 for all 12 channels.

4.19.7. Software versions diagnostic

The software versions diagnostic screen shows the DSC part number, version number, and flash checksum.

4.19.8. Complex hardware versions diagnostic

The complex hardware versions diagnostic screen shows the FPGA part number, version number, and flash checksum.

4.19.9. BIT diagnostic

The BIT diagnostic screen displays any Built In Test failure codes. If the screen displays all zeros, no BIT failure has been detected. Otherwise, a “1” will display. Each number corresponds with a specific failure, depending on its position in the string of numbers on the screen—failure position 1 being the leftmost space, and failure position 19 being the rightmost space. Reference the table below to determine which BIT has failed. Once all BIT failures have been resolved, press **ENT** to clear all codes.

Failure Position	BIT Failure	Corrective Action
1	Transmitter	Contact Appareo
2	Display	Contact Appareo
3	GPS Failure	Contact Appareo
4	Altitude Source	Use the altitude diagnostic screen to troubleshoot the altitude encoder connection

5	Internal Temperature	Let the transponder cool down. If the BIT failure is not resolved, contact Appareo.
6	Single Event Upset	Contact Appareo
7	Stuck Key	Try to unstick the stuck key
8	Stuck External IDENT	Use the external inputs diagnostic screen to check correctness of external IDENT polarity
9	Suppression	Check correctness of suppression input polarity
10	FPGA Checksum	Contact Appareo
11	EEPROM Checksum	Re-configure Stratus ESG, if necessary. Verify that the GPS Week Number Rollover is set to the correct value. If the BIT failure is not resolved, Contact Appareo.
12	Squitter Rate	Contact Appareo
13	Mode S Address	Contact Appareo
14	GPS Failure	Contact Appareo
15	1030 MHz RX VCO Lock	Contact Appareo
16	DSC RAM	Contact Appareo
17	FPGA RAM	Contact Appareo
18	GPS Failure	Contact Appareo
19	GPS Failure	Contact Appareo

Table 24: BIT diagnostic codes

5. Functional tests

When installed in accordance with these installation instructions, Stratus ESG complies with 14 CFR Part 91.227.

Final installation checks for Stratus ESG are the responsibility of the installer. The installer must ensure that Stratus ESG is installed on an aircraft that coincides with the approval given within the testing performed for the TSOs held by this device (TSO-C112e, TSO-C145d, and TSO-C166b). Refer to Appendix A.

After installation is complete, verify operation as identified in 14 CFR Part 43, Appendix F. The IFR6000 with OPT3 (manufactured by Cobham AvComm – formerly Aeroflex Test Solutions) or equivalent test set can be used to determine compliance.

Additional testing requirements can be found in Chapter 4 of Advisory Circular (AC) 20-165B. Additional functional tests may be required.

When installed correctly, Stratus ESG complies with 14 CFR Part 91.215 & 91.225. While in airspace specified in 14 CFR Part 91.215, Stratus ESG must be maintained to 14 CFR Part 91.413. Additional maintenance information can be found in the Instructions for Continued Airworthiness (600845-000025).

In addition to maintaining compliance to the regulations above, perform the following operational tests after configuration.

NOTE: Tests should be executed in an area where the aircraft has an unimpeded view of the sky, such that a proper GPS fix can be established.

5.1. Power bus

Turn on power to the aircraft. Verify that the unit powers on.

5.2. Discrete inputs

NOTE: Depending on the installation, the functional tests for the following discrete inputs are optional.

1. Turn off Stratus ESG and enter into configuration mode (while holding the **FUNC** key, press and release the **PWR** key).

2. Press **FUNC** or the arrow keys to advance to the external input diagnostics screen. The screen displays the real-time state of the external standby, external IDENT, and squat switch inputs.

3. Activate and deactivate each discrete input and verify that the proper state is reflected on the display.
   - External standby: Ground each transponder's external standby pin and verify that the state is "inactive."
   - External IDENT: Activate the external switch and verify that the state is "active."
   - Squat switch: Activate the squat switch and verify that the correct state is shown.

5.3. Analog inputs

1. Enter into configuration mode on Stratus ESG.

2. Press **FUNC** or the arrow keys to advance to the analog input diagnostics screen. The screen displays the real-time values read from the lighting bus and ambient light sensor.

3. Block the ambient lighting sensor input. Verify that the signal percentage drops.

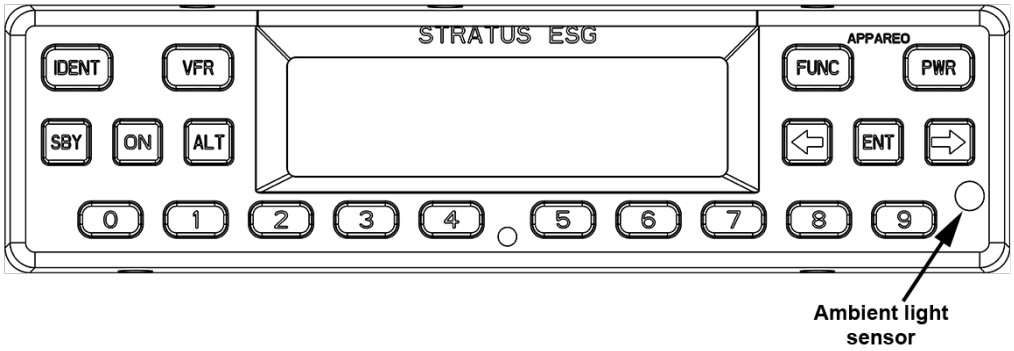

Figure 2: Ambient light sensor location

4. Shine a light on the ambient light sensor. Verify that the signal percentage increases.

5. If you are using the 14V or 28V lighting bus: Adjust the lighting bus input to minimum. Verify that the displayed value is 0%.

6. If you are using the 14V or 28V lighting bus: Adjust the lighting bus input to maximum. Verify that the displayed value is 100%.

5.4. Altitude

1. Enter into configuration mode on Stratus ESG.

2. Press **FUNC** or the arrow keys to advance to the altitude diagnostic screen.

3. Verify that the altitude displayed is correct to your geographic location.

5.5. EMI check

NOTE: The EMI testing shall not be performed until after the system functional ground test is complete and passes.

5.5.1. Communications

(i) Cockpit intercom

Using the cockpit intercom, verify interference-free communications between the crew while monitoring the effects of Stratus ESG.

(ii) Cabin paging

Verify that cabin paging is functioning clearly while monitoring the effects of Stratus ESG.

5.5.2. VHF communications

Set VHF communications radios to multiple frequencies and monitor the effects of Stratus ESG while transmitting and receiving. At a minimum, the frequencies listed below should be tested, in addition to locally available frequencies. Each transmission should occur for 35 seconds for each frequency.

Verify that the NIC value on the GPS receive diagnostic screen is 7 or greater.

Test each frequency in 1 MHz increments between 118 -136.000 MHz.

Test the following frequencies for VHF radios with 25kHz spacing:

121.150	121.175	121.200	121.225
121.250	131.200	131.225	131.250
131.275	131.300	131.325	131.350

Test the following frequencies for VHF radios with 8.33kHz spacing:

121.185	121.190	130.285	131.290

5.5.3. HF communications

If the aircraft is equipped with HF communications radios, set to multiple frequencies and monitor effects of Stratus ESG while transmitting and receiving. Record the frequencies tested:

5.5.4. SATCOM communications

If aircraft is equipped with a SATCOM system, operate the SATCOM equipment while monitoring the GPS CN0 diagnostic screen. Verify that the CN0 values on the GPS receive diagnostic screen do not drop by 2 dB or more.

5.5.5. Navigation

(i) VOR / ILS

Verify the operation of each VHF Nav receiver in both VOR and ILS modes (including glide slope) while monitoring the effects of Stratus ESG. Record the frequencies tested.

108.000 MHZ 108.100 MHZ

(ii) DME

Verify the operation of each DME while monitoring the effects of Stratus ESG. The same frequencies used for VOR and ILS testing may be used for this test.

(iii) Marker Beacon

Verify the operation of each Marker Beacon Receiver while monitoring the effects of Stratus ESG. The same frequencies used for the ILS test above may be used.

(iv) ADF

Verify the operation of each ADF receiver while monitoring the effects of Stratus ESG. Frequencies from each band should be tested when possible. Public broadcast stations are acceptable for conducting test.

5.5.6. Flight management systems

(i) FMS

Enter a flight plan into each FMS and verify the display of the track and navigation information while monitoring the effects of Stratus ESG.

(ii) GPS

Monitor GPS signals for each GPS receiver and verify stability of the signals while monitoring the effects of Stratus ESG.

Record GPS position coordinates for the aircraft.

(iii) Auto pilot

Verify the function of auto pilot while monitoring the effects of Stratus ESG.

5.5.7. Safety equipment

(i) EGPWS / TAWS

Verify the function of the EGPWS and Terrain Display (if equipped) while monitoring the effects of Stratus ESG.

(ii) TCAS

Verify the function of the TCAS while monitoring the effects of Stratus ESG. Self-test and monitoring targets of opportunity should both be evaluated.

(iii) Weather radar

Verify the function of each weather radar system while monitoring the effects of Stratus ESG. All displays capable of showing weather radar should be evaluated.

(iv) Radio altimeter

Verify each radio altimeter system functions correctly while monitoring the effects of Stratus ESG. Each unit should self-test correctly and be free of continuous variation while parked on the ramp.

(v) Engine indications & fuel flow (engines operating)

Aircraft must be taken off ground power (if necessary). Start aircraft engines. Check to be certain that all engine indicators read appropriately.

Check to be certain that all fuel flow indicators read appropriately.

5.6. Compass swing test

After successful completion of the above EMI tests, evaluate the necessity of a swing test.

5.7. Flight test

NOTE: The flight test shall not be performed until after the system functional ground test and EMI test is complete and passes.

It is recommended that a flight test be conducted after installation to verify proper operation and installation of Stratus ESG. A compliance report can be obtained by emailing 9-AWA-AFS-300-ADSB-AvionicsCheck@faa.gov with the aircraft information. This method is controlled by the FAA and may be subject to change.

For additional information visit the FAA website: http://www.faa.gov/nextgen/equipadsb/.

6. Using Stratus ESG

See the Stratus ESG Pilot's Guide (600890-000049) for a full description of Stratus ESG's function.

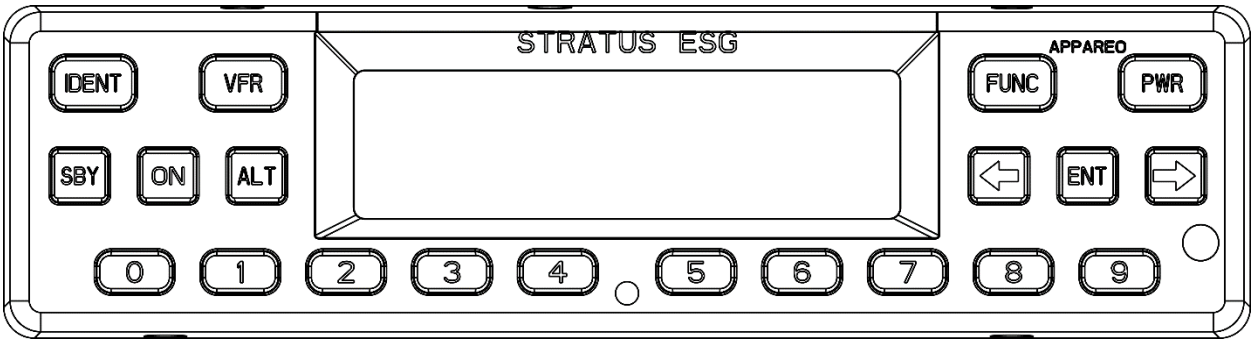

Figure 3: Stratus ESG front panel

6.1. Mode selection keys

Use the mode selection keys to change the transponder mode. The table below describes each of these modes.

Mode	Key	Description
Off	PWR	Stratus ESG is powered off.
Standby	SBY	Stratus ESG is powered on and does not send responses to any ATC interrogations.
Altitude	ALT	Stratus ESG is powered on and responds to all Mode A/C/S interrogations. Altitude is reported.
Ground	(none)	Stratus ESG is powered on and in ALT or On mode, but does not report altitude. Ground mode is automatically detected. Press the **ALT** or **ON** key to override Ground mode. Press **SBY** to remove this override.
On	ON	Stratus ESG is powered on and responds to all Mode A/C/S interrogations, but altitude reporting is suppressed.

Table 25: Mode selection keys

6.2. Event indicators

When certain events occur, an indicator will appear on your Stratus ESG display. The table below describes each indicator's meaning.

Indicator	Meaning
	ADS-B transmission contains GPS position information with a radius of containment under 1 nautical mile.
	A response was transmitted from a mode A/C/S interrogation. The indicator will time out if another reply does not occur within one second.
	A built-in-test (BIT) has failed. See Section 4.19.9 of this document and the Stratus ESG Pilot's Guide for more information about BIT failures.

Table 26: Event indicators

6.3. FUNC key

Press the **FUNC** key or the arrow keys, to switch from the Default screen to the Pressure Altitude screen, GPS screen, Flight ID screen, and Brightness screen. These screens are described below:

Pressure Altitude screen: Displays the current pressure altitude. If no valid altitude is detected or Stratus ESG is in On mode, the altitude field will be replaced by dashes.

Figure 4: Pressure Altitude screen

GPS screen: Displays the aircraft's GPS position in degrees latitude and longitude. If no GPS signal is being received, the latitude and longitude fields will be replaced by dashes.

Figure 5: GPS screen

Flight ID screen: Displays the currently entered Flight ID.

Figure 6: Flight ID screen

Brightness screen: Allows for adjustment of screen brightness while in flight. Press **ENT**, then the left or right arrow keys to adjust brightness. Press **ENT** again to confirm the new setting.

Figure 7: Brightness screen

6.4. Other keys

6.4.1. Arrow keys

Use the arrow keys to advance forward and backward when entering numbers or letters and to cycle through options in Configuration mode. They can also be used for cycling through the display screens.

6.4.2. Numerical keys

Use the numerical keys to enter information such as the flight ID or squawk code. See Section 6.5 for directions for how to enter the squawk code for your aircraft's flight, and see Section 6.6 for instructions on how to enter a flight ID.

Sometimes, a textual or non-numerical input will be required. If this is the case, press the number that is associated with the letter group you want to input, according to the graphic on the screen. To cycle through the letters associated with each number, press the number key

repeatedly until the letter you want to input appears. You can input a space after cycling through all of the letters for a particular number key. Once the correct character is selected, use the arrow keys to advance to the next field to enter the next character in the sequence.

6.4.3. Identification (IDENT) key

If you are instructed by Air Traffic Control (ATC) to IDENT, press the **IDENT** key on your Stratus ESG. Pressing **IDENT** will make your aircraft's reply pulse on ATC's monitors for 18 seconds. "IDENT" will be shown on the display while IDENT is activated.

6.4.4. VFR key

Press the **VFR** key to broadcast the VFR squawk code. The factory-set VFR code is 1200, but the default number may be reconfigured.

6.4.5. Power (PWR) key

The **PWR** key is used to power Stratus ESG on and off. When Stratus ESG is powered on, it retains the last used squawk code and operation mode.

6.5. Entering a squawk code

While on any screen that the squawk code is shown, press the appropriate number keys (0 through 7) to enter the squawk code. The new digits will be shown on the display screen. Five seconds after the fourth digit is entered, Stratus ESG will automatically save the entered squawk code.

NOTE: If you incorrectly enter a number before the code is automatically saved, press the left arrow key and then press the correct number key.

WARNING: Squawk codes 7500 (hijacking), 7600 (radio failure), and 7700 (emergency) are reserved for emergencies. There may also be other reserved codes, depending on the region the pilot is flying in. It is the pilot in command's responsibility to comply with their jurisdiction's operating rules and regulations.

6.6. Entering the flight identification number

To enter your flight identification number:

1. Press **FUNC** or the arrow keys until "Flight ID" appears. The registration number will be displayed in the Flight ID screen.

2. Press **ENT**.

3. Use the number keys to overwrite the registration number. Use the left and right arrow keys to change the cursor position. See Section 6.4.2 for instructions on how to enter non-numerical input.

NOTE: If the new flight ID is less than 8 digits and there are characters from the registration number remaining after the new flight ID has been entered, insert spaces in those fields to overwrite the characters.

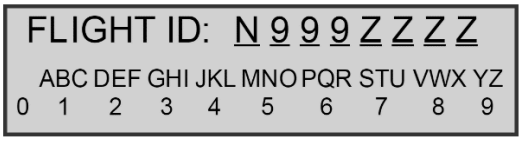

Figure 8: Flight ID entry screen

4. Press **ENT** to confirm the new flight ID.

7. Troubleshooting

The following table addresses problems that could arise while using Stratus ESG and presents troubleshooting steps that could correct the problem.

Problem	Troubleshooting Steps
GPS information is not being received	1. Verify that the aircraft has a clear view of the sky. 2. Verify that the antenna connections and cables are not loose. 3. Verify that the coax cable is connected to the correct port. **NOTE**: Initial GPS fix could take up to 20 minutes.
GPS signal quality is reduced	1. Turn off all avionics. 2. Enter into configuration mode on Stratus ESG. 3. Go to the CN0 diagnostic screen and wait for the CN0 values to populate. 4. Turn on one avionic at a time. If the CN0 values drop by 2 dB or more, there might be an interference problem. The avionic causing the interference might need to be relocated in the cockpit, antennas might need to be moved farther apart, or filters might need to be added to the avionic.
Transponder is not receiving the squat switch position	1. Check the connections and the pin-out of the transponder to verify that the squat switch port is correctly connected. 2. Verify that the squat switch works independent of the transponder.
The power key does not power on Stratus ESG	1. Verify that the power key is not stuck. 2. Verify that the circuit breaker has not tripped. **If it has tripped**: Reset the circuit breaker switch and try the power key again. **NOTE**: If the circuit breaker opens it may be reset only once. **If it did not trip**: Verify that the electrical connection to the transponder is secure. Verify that the voltage at the input to the unit is between 11 VDC and 36 VDC.

The altitude displayed is incorrect	1. Enter into configuration mode on Stratus ESG and verify that the altitude source is set as the currently used altitude source. If the altitude source is a serial connection, verify that the correct encoding option was selected. 2. Verify that the correct connections are made to the transponder. 3. Use an altitude simulator to verify the cabling. 4. Verify that there is not a problem with the altitude source.
The screen displays a Built in Test (BIT) failure The display screen will display a warning message and a degraded state indicator ⚠ if any of Stratus ESG's BITs fail.	The Stratus ESG screen might display a warning message with the instructions below. Below is guidance regarding how to assess the failure: • **PRESS FUNC TO CLEAR**: A non-critical error has been detected. The transponder will run in a degraded state until the error is resolved. Contact Appareo for further assistance. • **PLEASE RESTART UNIT**: A critical error has been detected. Restarting the unit may fix the error. If the message returns after restarting, contact Appareo for further assistance. • **PLEASE SHUTDOWN UNIT**: A critical error has been detected. Power off the unit and do not turn it back on. Contact Appareo for further assistance. • **OVERHEATED**: The transponder has overheated. Transponder function will resume when the transponder cools down. • **WAITING TO BE UNSTUCK**: A key has been depressed for more than 20 seconds. If a key is stuck, try to unstick the key. • **WAITING FOR RELEASE**: The external suppression input is constantly in a suppressed state. Contact Appareo for further assistance. • **ATTEMPTING TO RECOVER**: A squitter rate error has been detected. The transponder may recover itself, but if it does not, restart the unit. If the message returns after restarting, contact Appareo for further assistance.

Technical Assistance

For support, please contact Appareo at support@appareo.com.

By mail:

1830 NDSU Research Circle North
Fargo, ND 58102
United States of America

Appendix A

Nomenclature: Stratus ESG Transponder

Part number: 153510-000017

TSO number: TSO-C112e, TSO-C145d, TSO-C166b

Manufacturer's specification and/or other applicable specification: 608080-000021

Manufacturer: Appareo Systems

Address: 1830 NDSU Research Circle North, Fargo, ND 58102, USA

Conditions	DO-160G Section	Description of tests conducted
Temperature and Altitude	4.0	
Low Temperature	4.5.2	Equipment tested to Category B1.
High Temperature	4.5.3	Equipment tested to Category B1.
Operating High Temp Test	4.5.4	Equipment tested to Category B1.
In-Flight Loss of Cooling	4.5.5	Equipment identified as Category X, no test performed.
Altitude	4.6.1	Equipment tested to Category B1.
Decompression	4.6.2	Equipment identified as Category X, no test performed.
Overpressure	4.6.3	Equipment identified as Category X, no test performed.
Temperature Variation	5.0	Equipment tested to Category C.
Humidity	6.0	Equipment tested to Category A.
Operational Shocks and Crash Safety	7.0	
Operational Shocks	7.2	Equipment tested to Category B.
Crash Safety	7.3	Equipment tested to Category B. Aircraft type: 5F

Vibration	8.0	
	8.5.1	Equipment tested to Category S. Group 3 during, 1 after
Explosion Proofness	9.0	Equipment identified as Category X, no test performed.
Waterproofness	10.0	Equipment identified as Category X, no test performed.
Fluids Susceptibility	11.0	Equipment identified as Category X, no test performed.
Sand and Dust	12.0	Equipment identified as Category X, no test performed.
Fungus Resistance Test	13.0	Equipment identified as Category X, no test performed.
Salt Fog Test	14.0	Equipment identified as Category X, no test performed.
Magnetic Effect	15.0	Equipment tested to Category A.
Power Input	16.0	
Normal Operating Conditions	16.6.1	Equipment tested to Category BXX. Group 3 during, 2 after
Voltage	16.6.1.1	Equipment tested to Category BXX.
Abnormal Operating Conditions	16.6.2	Equipment tested to Category BXX. Group 3 during, 2 after
Voltage Spike	17.0	Equipment tested to Category A.
Audio Frequency Conducted Susceptibility	18.0	Equipment tested to Category B.
Induced Signal Susceptibility	19.0	Equipment tested to Category ZCX.
Radio Frequency Susceptibility	20.0	
Conducted Susceptibility	20.4	Equipment tested to Category TT.
Radiated Susceptibility	20.5	Equipment tested to Category TT.
Emission of Radio Frequency Energy	21.0	Equipment tested to Category B.
Lightning Induced transient Susceptibility	22.0	Equipment tested to Category A1XXXX.
Lightning Direct Effects	23.0	Equipment identified as Category X, no test performed.

Icing	24.0	Equipment identified as Category X, no test performed.
Electrostatic Discharge	25.0	Equipment tested to Category A. No group test during, 2 after
Fire, Flammability	26.0	Flammability testing was performed utilizing the method as indicated in 14 CFR Part 25 Appendix F.

Table 27: DO-160G tests performed

STRATUS
by APPAREO

ADS-B IN

READY FOR TAKEOFF

Made For ForeFlight

- Subscription-Free Weather
- ADS-B Traffic
- Backup Attitude (AHRS)
- $899

THE BEST ADS-B RECEIVER IS BETTER THAN EVER

Stratus is the simple-to-use, pocket-sized, portable wireless receiver that transforms your iPad into the ultimate flight tool. Get subscription-free weather, GPS information, backup attitude and ADS-B traffic — all integrated with ForeFlight Mobile. Easy situational awareness for an unbelievable price.

FREE IN-FLIGHT WEATHER

Get NEXRAD radar, METARs, TAFs, TFRs, AIRMETs, SIGMETs, NOTAMs and more on your iPad with no subscription fees — ever. Stratus Replay allows you to turn off the iPad screen and save battery; when you turn the screen on again, Stratus will automatically send all the weather information you missed.

AUTOMATIC FLIGHT DATA RECORDER

Stratus is the first ADS-B receiver to offer a complete flight data recorder system. When this is enabled, Stratus automatically records your flight — complete with GPS position, altitude speed and attitude. Flight logs are saved in ForeFlight, and can be viewed online, in Google Earth or in the CloudAhoy app. Ideal for proficiency flights and CFIs.

STUNNING SYNTHETIC VISION DISPLAY

With luminous terrain, night sky view, and a brilliant obstacle awareness system, ForeFlight with Synthetic Vision will forever change the way you fly. The built-in AHRS in Stratus 2S drives a super responsive pitch and bank instrument in the center of the Synthetic Vision view. In an emergency situation, you've got a backup glass cockpit on your iPad.

DUAL BAND ADS-B TRAFFIC

Stratus 2S includes a dual band (978 MHz and 1090 MHz) receiver so it can display traffic information right on the ForeFlight Maps page. See relative altitude, climb/descent rate and projected track. Note: ADS-B traffic is limited unless your aircraft has ADS-B Out installed in the panel.

STRATUS 2S FEATURES

Subscription-Free Weather	✓
WAAS GPS	✓
ADS-B Traffic	Dual Band
Backup Attitude (AHRS)	✓
Flight Data Recorder	✓
Pressure Altitude Sensor	✓
Battery Life	8 Hours*
Connector	USB Type C
Suction Cup Window Mount	✓
Price	$899

*When using the optional interface cable kit, Stratus 2S is powered from the transponder.

BUY NOW
at appareo.com/stratus

CONNECT WITH THE STRATUS TRANSPONDER TO GET THE ULTIMATE ADS-B EXPERIENCE

Using the optional interface cable kit, plug a Stratus receiver into the Stratus ESG connector plate to utilize aircraft power and externally mounted antennas.

ADS-B OUT COMPLIANCE IN ONE BOX

- 1090 ES Transponder
- Built-In WAAS GPS
- GPS Antenna Included
- $2,995

STRATUS ESG

DESIGNED, TESTED AND BUILT IN THE USA

Stratus products are engineered, tested and manufactured in the United States, giving pilots the most reliable ADS-B products on the market.

APPAREO

1810 NDSU Research Circle N • Fargo, ND 58102 • **APPAREO.COM/STRATUS**

STRATUS

Stratus 2i Installation Guide

Revision 1.2

APPAREO

Stratus 2i Installation Guide

Appareo Systems, LLC, 1810 NDSU Research Circle North, Fargo, ND 58102 USA.

Record of Revision			
Revision Number	**Change Description**	**Revision Date**	**Inserted By**
1.0	Initial release	05/20/16	CJW
1.1	CM 20415	07/17/16	AAL
1.2	Added BNC jack to blind mate adapter to parts list and Section 3 install instructions	10/12/16	AAL

1. Preparing for install

This document is intended to help you determine the best method for installing Stratus 2i interface cables in an aircraft and connecting them to a Stratus ESG.

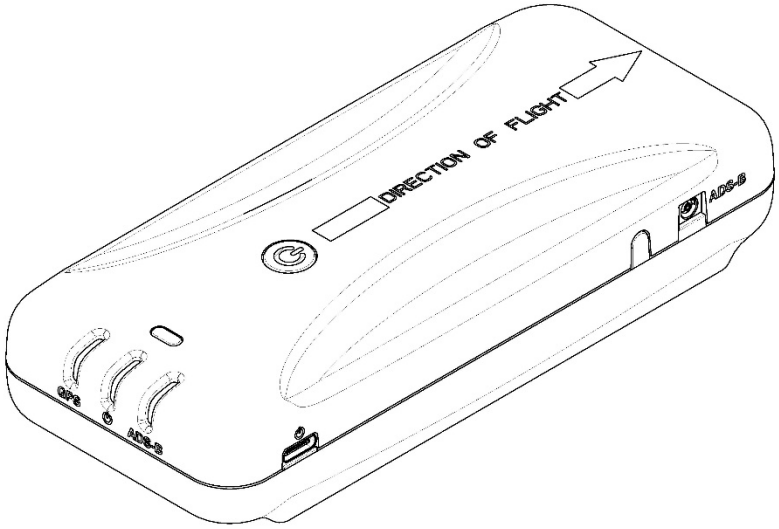

NOTE: For instructions for how to install Stratus ESG, refer to the documentation provided with the transponder or in the Stratus ESG Dealer Portal.

Supplied components:

- Stratus 2i ADS-B In portable receiver
- Cradle
- Stratus 2i Pilot's Guide
- Power serial interface cable
- RF interface cable
- 9-pin D-Sub connector with mounting hardware
- BNC jack to blind mate adapter

2. Placing Stratus 2i in the aircraft

Choose an installation location that provides for the best line-of-sight between the Stratus 2i and the iPad for optimal Wi-Fi communication.

It is important for Stratus 2i to be installed in the orientation indicated by the "Direction of Flight" arrow on the receiver. Stratus 2i can be placed upside down or sideways, as long as the "Direction of Flight" arrow points in the correct direction.

The provided cradle is an optional accessory to help secure Stratus 2i during flight. Mounting methods and locations can be determined by the installer or pilot.

NOTE: The mounting holes in the Stratus 2i cradle are compatible with many RAM mounts.

3. Installing the interface cables

NOTE: For instructions on installing Stratus ESG, reference the Stratus ESG Installation Instructions (Appareo document number 600840-000031 for TSO installations and 600840-000032 for STC installations). These documents can be found on the Stratus ESG Dealer Portal.

1. Wire the 9 pin D-Sub connector to the transponder following the wiring diagram on Page 5, allowing for a maximum harness length of 3 feet. Use 20 gauge wire for this harness.
2. Mate this 9-pin D-Sub connector with the Stratus 2i power serial interface cable and secure using the thumb screws.
3. Attach the BNC blind mate adapter to the ADSB AUX hole on the transponder backplate.
4. Attach the BNC connector of the Stratus 2i RF interface cable to Stratus ESG's ADSB AUX port.
5. Connect the remaining end of the power serial cable into the power port of Stratus 2i (marked by the power symbol).
6. Connect the remaining end of the Stratus 2i RF interface cable into the ADS-B port of Stratus 2i. Secure cables as necessary.
7. Power on the aircraft to ensure that Stratus 2i is receiving power. Refer to the LED indicator statuses on Page 6.

4. Configuring the transponder

The transponder must be configured to allow for ADS-B In receiver information from the cockpit after Stratus 2i has been placed in the aircraft.

1. Enter into configuration mode on the transponder (while holding the **FUNC** key, press and release the **PWR** key).
2. Press **FUNC** or the arrow keys to navigate to the "ADS-B Capability" screen and press **ENT**.
3. Use the arrow keys to set the capability to **UAT** and **1090 ES** (the frequencies Stratus 2i is capable of).
4. Press **ENT**.

5. Powering receiver on and off

Once it is receiving aircraft power, Stratus 2i will automatically turn on. All LED indicators will briefly illuminate red and then green as the receiver powers on and auto-calibrates. If Stratus 2i is moved after being turned on, it must be re-calibrated in ForeFlight Mobile.

6. Stratus ESG to Stratus 2i Wiring Diagram

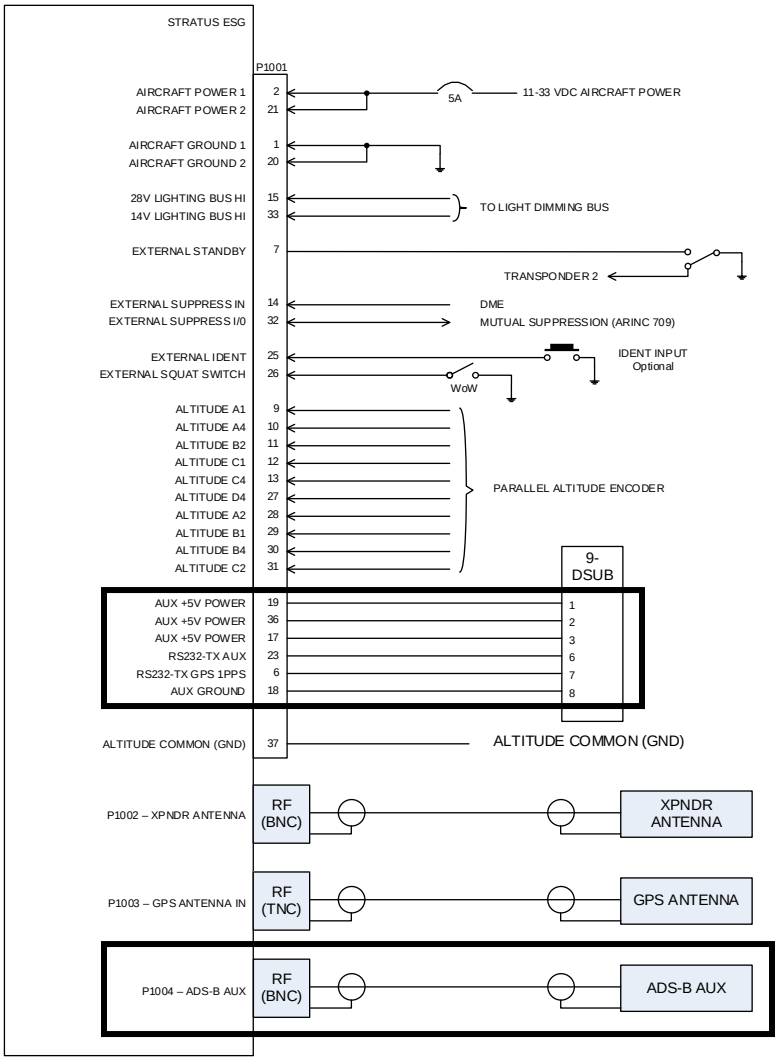

37-DSUB		9-DSUB
PIN	DESCRIPTION	PIN
19	SWITCHED POWER OUTPUT	1
36	D-	2
17	D+	3
-	-	4
	-	5
23	RS232-TX AUX	6
6	RS232-TX GPS 1PPS	7
18	AUX GROUND	8
-	-	9

Guide: Black outline = applicable to Stratus 2i installation

7. LED indicator status

Label	Color	Condition Indicated
GPS Signal	Green	3-D Lock
	Off	Receiver is powered off.
Power (indicated by power symbol)	Green (pulsing)	Receiver is powered on and operational.
	Off	No power is being received; receiver is powered off.
ADS-B Signal	Green	ADS-B FIS-B signal has been received from *multiple* towers in the past three seconds.
	Yellow	ADS-B FIS-B signal has been received from *one* tower in the past three seconds.
	Off	ADS-B FIS-B signal has not been received in the past three seconds.
All indicators	Briefly red and then green	Receiver is powering on and calibrating.
	Red (flashing)	Built-in-test failure. Contact support for assistance.
	Yellow (flashing)	Installing firmware update.
	Yellow (solid)	Applying firmware update.
	Green for two seconds	Firmware update complete.
	Off for five seconds, then flashing green	Power button is depressed. After 30 seconds, factory reset process will begin.
	Green to yellow to green	Factory reset process is complete.

United States of America

Department of Transportation -- Federal Aviation Administration

Supplemental Type Certificate

Number SA04112CH

This certificate issued to Appareo Systems, LLC
1810 NDSU Research Circle North
Fargo, ND 58102

certifies that the change in the type design for the following product with the limitations and conditions therefor as specified hereon meets the airworthiness requirements of Part 23 *of the* Federal Aviation *Regulations.* (See Type Certificate Data Sheet No. 3A12 for complete certification basis)

Original Product Type Certificate Number: 3A12

Make: Cessna

Model: 172, 172A, 172B, 172C, 172D, 172E, 172F, 172G, 172H, 172I, 172K, 172L, 172M, 172N, 172P, 172Q, 172R, 172S

Description of Type Design Change:

Installation of Appareo Systems, LLC Stratus ESG ADS-B transponder in accordance with Stratus ESG STC Master Document List, Document No. 606586-000054, Rev. 1.5, dated June 22, 2016, or later FAA approved revision.

Limitations and Conditions:

1. The installer must determine whether this design change is compatible with previously approved modifications.
2. FAA Approved Airplane Flight Manual Supplement, Document No. 606586-000075, Rev. 1.6, dated July 7, 2016, or later FAA approved revision is a required part of this modification.
3. If the holder agrees to permit another person to use this certificate to alter the product, the holder must give the other person written evidence of that permission.

This certificate and the supporting data which is the basis for approval shall remain in effect until surrendered, suspended, revoked or a termination date is otherwise established by the Administrator of the Federal Aviation Administration.

Date of application: June 29, 2012

Date of issuance: July 7, 2016

Date reissued:

Date amended:

By direction of the Administrator

(*Signature*)

Steven L. Lardinois
Manager, Systems and Flight Test Branch
Chicago Aircraft Certification Office

(*Title*)

APPAREO

1810 NDSU Research Circle North
Fargo, ND 58102
|701| 356-2200

July 14, 2016

Subject: STC permission to use FAA STC SA04112CH for Appareo Stratus ESG system

Consistent with FAA Order 8110.4C and AC21-40A, Appareo System, LLC, grants permission to Appareo Systems dealers, installers, and owners of the Stratus ESG units to utilize FAA STC SA04112CH and associated data, for sole and express purpose of installation and approval of the Appareo Systems' Stratus ESG, and associated interfaces to previously approved equipment. Appareo Systems grants permission to use the associated data for obtaining other FAA approved means of installation for aircraft not covered in STC SA04112CH.

Vern Miller

Vernon J. Miller Jr.
Sr. Certification Specialist
Appareo Systems, LLC

NOTICE

U.S. DEPARTMENT OF TRANSPORTATION
FEDERAL AVIATION ADMINISTRATION

N 8900.362

National Policy

Effective Date:
5/9/16

Cancellation Date:
5/9/17

SUBJ: Policy for Installation of ADS-B OUT Systems

1. Purpose of This Notice. This notice provides Federal Aviation Administration (FAA) policy regarding installation of Automatic Dependent Surveillance-Broadcast (ADS-B) OUT systems into civil aircraft certificated under Title 14 of the Code of Federal Regulations (14 CFR) parts 23, 25, 27, 29, and their predecessor regulations, for compliance with 14 CFR part 91, §§ 91.225 and 91.227.

2. Audience. The primary audience for this notice is certificate-holding district offices (CHDO) including Flight Standards District Offices (FSDO) and certificate management offices (CMO), and aviation safety inspectors (ASI) and aviation safety technicians (AST). The secondary audience includes Flight Standards (AFS) branches and divisions in regions and headquarters (HQ).

3. Where You Can Find This Notice. You can find this notice on the MyFAA employee Web site at https://employees.faa.gov/tools_resources/orders_notices. Inspectors can access this notice through the Flight Standards Information Management System (FSIMS) at http://fsims.avs.faa.gov. This notice is available to the public at http://www.faa.gov/regulations_policies/orders_notices.

4. Background. This policy is related to the approval and installation of ADS-B Out systems for the purpose of compliance with §§ 91.225 and 91.227.

> **Note:** Compliance with §§ 91.225 and 91.227 requires installation of equipment meeting the performance requirements of Technical Standard Order (TSO)-C166b or TSO-C154c equipment after January 1, 2020.

5. Initial Approval of ADS-B OUT Systems. Initial ADS-B OUT system pairings (transmitter and Global Positioning System (GPS)) must be approved for installation using the Type Certificate (TC), amended TC, or Supplemental Type Certificate (STC) process. The appropriate Aircraft Certification Office (ACO) should be consulted to determine the approval process for new system pairings. Once the performance of the initial pairing has been established, the FAA considers follow-on installations of the same pairing to be approved.

Note: Organization Designation Authorization (ODA) holders can issue amended TCs and STCs when authorized by their FAA Organization Management Team (OMT).

6. Follow-On Installations of Approved ADS-B Transmitter and GPS Pairings. After initial approval, ADS-B OUT systems that have previously received FAA approval and meet all of the following conditions may be installed and returned to service on other aircraft without further data approval:

a. Technical Standard Orders. The ADS-B OUT equipment is manufactured under TSO-C166b or TSO-C154c.

b. Position Sensor. The Global Navigation Satellite System (GNSS) position sensor is manufactured under TSO-C129 or later, TSO-C145a/C146a or later, or TSO-C196 or later.

c. Compliance Statement. The installer has a statement of compliance (SOC) from the applicable manufacturer(s) or STC holder that the equipment (self-contained) or specific equipment pairing (ADS-B OUT transmitter and GNSS position sensor) have been shown, via TC, amended TC, or STC, to comply with all § 91.227 requirements. This SOC may be included in the applicable installation instructions. The installation instructions must address how the equipment is to be installed and maintained to comply with not only the applicable TSOs but also § 91.227 requirements.

d. Permission to Use Approved Data. The installer has documentation from the STC holder(s) (per § 91.403(d)) that indicates the owner/operator of the aircraft has permission to use the STC data for the alteration.

e. System Connections. The ADS-B OUT equipment, GNSS position sensor, and interconnect wiring are connected in accordance with the applicable manufacturer's or STC installation instructions.

f. Configuration Settings. The installation is performed in accordance with documentation from the manufacturer(s) or STC holder indicating what configuration settings, if applicable, are to be used for the ADS-B OUT system to meet § 91.227 requirements which include, but may not be limited to:

(1) FAA assigned Mode S/International Civil Aviation Organization (ICAO) code address (hexadecimal/octal format) associated with current aircraft registration;

(2) Emitter Category (refer to the current edition of Advisory Circular (AC) 20-165, Airworthiness Approval of Automatic Dependent Surveillance—Broadcast OUT Systems, Chapter 3);

(3) System Integrity Level (SIL);

(4) System Design Assurance (SDA);

(5) Flight Identification (FLT ID) (e.g., N-number); and

(6) GNSS sensor settings required to correctly communicate with the ADS-B OUT equipment.

g. Installation Compliance. The installation is performed in accordance with 14 CFR part 43. Acceptable methods, techniques, and practices may be found in the current edition of AC 43.13-2, Acceptable Methods, Techniques, and Practices—Aircraft Alterations.

h. System Performance Verification. The installed ADS-B OUT system has been verified to comply with both the system configuration and equipment performance requirements of § 91.227. The system configuration aspects of § 91.227 requirements include the ICAO code address, emitter category, SIL, SDA, FLT ID code, etc. Performance aspects of § 91.227 requirements include Navigation Integrity Category (NIC), Navigation Accuracy Category for Position (NACp), Navigation Accuracy Category for Velocity (NACv), etc. Acceptable compliance verification methods include:

(1) Operational Flight Evaluation. Conduct an operational flight evaluation (OFE) per § 91.407(b) and request an FAA ADS-B compliance report at the following email address 9-AWA-AFS-300-ADSB-AvionicsCheck@FAA.gov. Include the aircraft registration number (N-number) and the ADS-B transmitter and GPS equipment make/model information when submitting requests to the FAA for ADS-B OUT system OFE performance checks. Following receipt of the applicable OFE compliance report, the installer must verify the installed ADS-B OUT system complies with all § 91.227 performance requirements and the system configuration is correct for the aircraft; or

(2) Ramp Test Equipment (§ 91.407(c)). Use ramp test equipment to verify proper system configuration and compliance with § 91.227 equipment performance requirements.

i. Maintenance Record. The ADS-B OUT alteration must be documented in the aircraft maintenance record per part 43, § 43.9(a) and include the statement, “The installed ADS-B OUT system was shown to meet the equipment performance requirements of 14 CFR part 91, § 91.227.”

Note: Submit FAA Form 337, Major Repair and Alteration (Airframe, Powerplant, Propeller, or Appliance), to document ADS-B OUT alterations. On FAA Form 337, Block 8, include the following compliance statement, “The installed ADS-B OUT system was shown to meet the equipment performance requirements of 14 CFR part 91, § 91.227,” along with the applicable ADS-B OUT transmitter and GPS make/model information. Submit the completed FAA Form 337 to the Aircraft Registration Branch, AFS-750, P.O. Box 25504, Oklahoma City, Oklahoma 73125. The FAA Form 337 can be submitted directly without FAA approval in Block 3.

Note: ADS-B OUT alterations performed on aircraft operated by certificated operators may be documented in a manner acceptable to the Administrator.

7. ADS-B OUT Systems Requiring Additional Data Approval. ADS-B OUT systems that fail to meet the requirements for installation without further data approval, per paragraph 6, must be performed using approved data through appropriate means (refer to the current edition of

FAA Order 8300.16, Major Repair and Alteration Data Approval). Document applicable ADS-B OUT major alterations, per § 43.9, and include the required statements and equipage information specified in paragraph 6 in the aircraft maintenance record and on FAA Form 337, Block 8.

8. Aircraft Flight Manual (AFM) Revision. Following installation of a compliant ADS-B OUT system the General section of the AFM must be revised to include the following statement, "The installed ADS-B OUT system has been shown to meet the equipment performance requirements of 14 CFR part 91, § 91.227." Applicable AFM revisions do not require FAA approval.

9. Modifying an Approved Aircraft Design for ADS-B OUT. Modification of aircraft to comply with ADS-B OUT performance requirements that meet the criteria specified in paragraph 6 may do so under a minor change in type design. Some installations may not constitute a major change in type design so the use of a TC amendment or STC is an acceptable method for approval. Once a specific ADS-B OUT system pairing receives design approval, use of this same pairing on a different aircraft type is a minor aspect of the design change. If other aspects of the design change are evaluated and determined to be minor, the overall design change may be made as a minor change to type design. Pursuant to 14 CFR part 21, § 21.95, minor changes in type design may be approved under a method acceptable to the FAA before submitting to the FAA any substantiating or descriptive data.

> **Note:** For aircraft requiring initial installation of ADS-B OUT equipment consult your ACO regarding applicability for a major change in type design.

10. Disposition. The information in this notice will be incorporated into FAA Order 8900.1 before this notice expires. Please direct questions concerning the information in this notice to the Aircraft Maintenance Division (AFS-300), ADS-B Focus Team, at 202-267-1707.

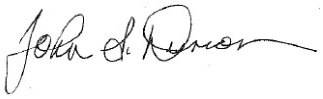

John S. Duncan
Director, Flight Standards Service

Appendix A. ADS-B Alteration Flowchart